CHAPTER 5

Wiring

Pin assignments

The following figure shows the pin assignments for the card's DB-9 connectors.

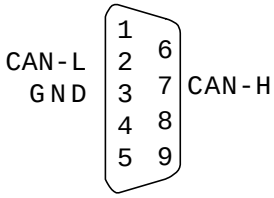

CAN

Termination resistor setup

Terminal resistors are factory installed to allow for impedence matching. These resistors can be enabled by utilizing jumpers number 9 and 10 (shown below). Jumper 9 enables the terminal resistor for port one, while jumper number 10 enables the terminal resistor for port two. The value of the resistor should equal the characteristic impedance of the signal wires (approximately 120 W).

The following figure shows resistor placements.

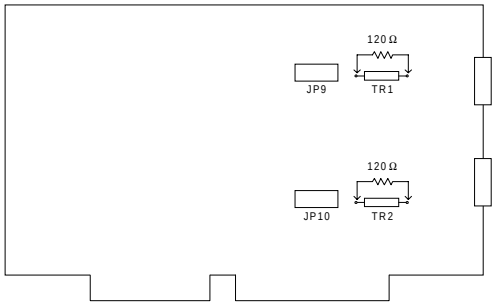

CAN termination resistor installation

CAN signal wiring

The CAN standard supports half-duplex communication. This means that just two wires are used to transmit and receive data.

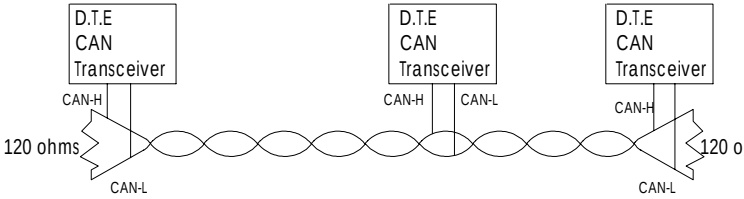

CAN wiring topology

Wiring connections are as follows:

PCL-841 DTE (male DB-9)		Terminal DTE
Pin	**Signal**	**Signal**
7	CAN-H	CAN-H
3	GND	GND
2	CAN-L	CAN-L