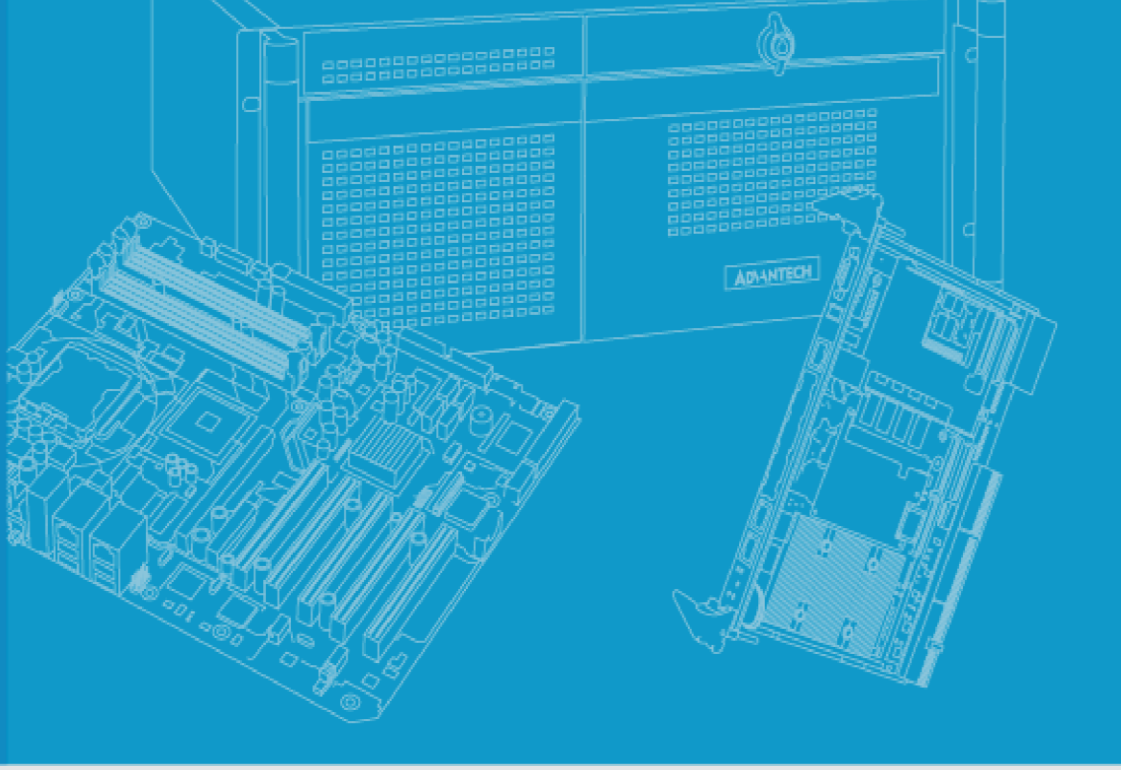

User Manual

SKY-8201L

COMPACT 2U HIGH PERFORMANCE SERVER BASED ON INTEL® XEON™ PROCESSOR SCALABLE FAMILY

ADVANTECH

Enabling an Intelligent Planet

Revision History

Date (mm/dd/yyyy)	Revision	Modifications
03/20/2018	0.1	Initial version - draft
04/20/2018	0.2	Update pictures

Copyright and Trademarks

About This Manual

Thank you for purchasing and using the Advantech SKY-8201L.

The target audience of this manual includes users, administrators and technicians. This publication is a useful reference when installing, configuring, operating and managing the SKY-8201L.

This manual is organized as follows:

- *Section 1*: Getting Started helps you with the first steps with the SKY-8201L.
- *Section 2*: Product Specification provides a detailed description of the SKY-8201L and its features.
- *Section 3*: Configuration and Service describes how to change the SKY-8201L's configuration or how to install and service replaceable items.
- *Section 4*: Tips, Tricks and Troubleshooting provides best practices and other information that may be helpful for operation and troubleshooting of the SKY-8201L.
- *Appendices* provide supplemental information referenced in the other sections of this document.

Useful Documents

If you cannot find the information you're looking for or need more detailed information on a specific topic, please refer to the list of additional documents and other sources of information below. Please contact your Advantech representative if you need help on obtaining these documents or still can't find what you're looking for.

- Advanced LAN Bypass User Manual
- Information on intel CPUs, Chipsets and NIC silicon can be found at: *www.intel.com*
- SKY-8201L Reference Platform Software User's Guide (for samples only)
- SKY-8201L BMC User's Guide
- ipmitool how-to can be found at: http://linux.die.net/man/1/ipmitool
- An introduction to IPMI can be found at:

  http://www.intel.com/content/www/us/en/servers/ipmi/ipmi-home.html

Technical Support and Assistance

1. Visit the Advantech website at http://support.advantech.com where you can find the latest information about our products.
2. Contact your distributor, sales representative, or Advantech's customer service center for technical support if you need additional assistance. Please have the following information ready before you call:
   - Product name and serial number
   - A description of your peripheral attachments
   - A description of your software (operating system, version, application software, etc.)
   - A complete description of the problem
   - The exact wording of any error messages

Acknowledgements

- Xeon, QuickAssist and Intel are trademarked by Intel Corp. All other product names or trademarks are properties of their respective owners.

Product Warranty (2 Years)

Advantech warrants to you, the original purchaser, that each of its products will be free from defects in materials and workmanship for two years from the date of purchase.

This warranty does not apply to any products which have been repaired or altered by persons other than repair personnel authorized by Advantech, or which have been subject to misuse, abuse, accident or improper installation. Advantech assumes no liability under the terms of this warranty as a consequence of such events.

If an Advantech product is defective, it will be repaired or replaced at no charge during the warranty period. For out-of-warranty repairs, you will be billed according to the cost of replacement materials, service time and freight. Please consult your dealer for more details. Because of Advantech's high quality-control standards and rigorous testing, most of our customers never need to use our repair service. But if you think you have obtained a defective product, please follow these steps:

1. Collect all the information about the problem encountered. (For example, CPU speed, Advantech products used, other hardware and software used, etc.)

   Note!
   To make our service more efficient, please make a note of anything abnormal and list any onscreen messages you get when the problem occurs.

2. Call your dealer and describe the problem. Please have your manual, product, and any other helpful information readily available.
3. If your product is diagnosed as defective, obtain an RMA (return merchandize authorization) number from your dealer. This allows us to process your return more quickly.

4. Carefully pack the defective product, a fully-completed Repair and Replacement Order Card and a photocopy of the proof of purchase date (such as your sales receipt) in a shippable container. A product returned without proof of the purchase date is not eligible for warranty service.
5. Write the RMA number visibly on the outside of the package and ship it prepaid to your dealer.

Warnings, Cautions and Notes

Warning!
Warnings indicate conditions, which if not observed, can cause personal injury!

Caution!
Cautions are included to help you avoid damaging hardware or losing data.

Note!
Notes provide additional information.

We Appreciate Your Input

Please let us know of any aspect of this product, including the manual, which could use improvement or correction. We appreciate your valuable input in helping make our products and documentation better.

Please send all such - in writing to: *ncg@advantech.com*

■

■

TABLE OF CONTENTS

LIST OF FIGURES

LIST OF TABLES

Chapter 1

Getting Started

1.1 Safety Instructions

Warning!
This section provides warnings that precede potentially dangerous procedures throughout this manual. Instructions contained in the warnings must be followed during all phases of operation, service, and repair of this equipment. You should also employ all other safety precautions necessary for the operation of the equipment in your operating environment.

Caution!
If you are not sure about the precautions applicable to your operating environment, please contact your company's safety administrator. For basic information you may also refer to the safety precautions per IEC704-1 listed below although Advantech disclaims all responsibility for the accuracy of any statements contained therein and its applicability for your specific environment.

Failure to comply with these precautions or with specific warnings elsewhere in this manual could result in personal injury or damage to the equipment.

Advantech intends to provide all necessary information to install and handle the SKY-8201L in this manual. Because of the complexity of this product and its various uses, we do not guarantee that the given information is complete. If you need additional information, contact your Advantech representative.

The product has been designed to meet the standard industrial safety requirements. It must not be used except in its specific area as specified in *Section 2.3*.

Only personnel trained by Advantech or persons qualified in electronics or electrical engineering is authorized to install service or maintain the product. The information given in this manual is meant to complete the knowledge of a specialist and must not be used as replacement for qualified personnel. Operating personnel must not remove equipment covers. Only factory authorized service personnel or other qualified service personnel may remove equipment covers for internal subassembly or component replacement or any internal adjustment.

Do not install substitute parts or perform any unauthorized modification of the equipment or the warranty may be voided. Contact your local Advantech representative for service and repair to make sure that all safety features are maintained.

1.1.1 Safety Precautions per IEC704-1

1. Read these safety instructions carefully.
2. Keep this User Manual for later reference.
3. Keep this equipment away from humidity.
4. Put this equipment on a reliable surface during installation. Dropping it or letting it fall may cause damage.
5. Make sure the voltage of the power source is correct before connecting the equipment to the power outlet.

6. Position the power cord so that people cannot step on it. Do not place anything over the power cord.
7. All cautions and warnings on the equipment should be noted.
8. If the equipment is not used for a long time, disconnect it from the power source to avoid damage by transient over-voltage.
9. Never pour any liquid into an opening. This may cause fire or electrical shock.
10. For safety reasons, the equipment should be opened only by qualified service personnel.
11. If one of the following situations arises, get the equipment checked by service personnel:
12. The power cord or plug is damaged.
13. Liquid has penetrated into the equipment.
14. The equipment has been exposed to moisture.
15. The equipment does not work well, or you cannot get it to work according
    - The equipment has been dropped and damaged.
    - The equipment has obvious signs of breakage.

Note!
Do not leave this equipment in an environment where the storage temperature may go beyond the range specified in Technical Specifications. This could damage the equipment. The equipment should be in a controlled environment.

Caution!
Danger of explosion if battery is incorrectly replaced. Replace only with the same or equivalent type recommended by the manufacturer, discard used batteries according to the manufacturer's instructions.

16. The sound pressure level at the operator's position according to IEC 704-1:1982 is no more than 70 dB (A).

DISCLAIMER: The set of instructions is given according to IEC704-1. Advantech disclaims all responsibility for the accuracy of any statements contained herein.

1.1.2 Safety Precautions – Static Electricity

Follow instructions below to protect yourself from harm and the products from damage:

1. Be sure you are at an ESD workstation, or grounded with an ESD strap before opening the top cover or installing/removing any unit accessible from the outside. Doing so will discharge any static electricity that might have built up in your body. The SKY-8201L supports an ESC Ground lug for grounding of service and other technical staff at location B (see *Section 2.4.2* for location).
2. Don't touch any components inside the system while the system is on.
3. Disconnect power before making any configuration changes. The sudden rush of power as you connect a jumper or install a card may damage sensitive electronic components.

4. When unpacking a static-sensitive component from its shipping carton, do not remove the component's antistatic packing material until you are ready to install the component in the unit.
5. When transporting any electrical component, first place it in an antistatic container or packaging.

1.2 Unpacking

Please check the delivery for completeness as you open the carton carefully. If any of the items listed in *Table 1-1* is missing or damaged, please contact your Advantech representative.

For maximum protection during shipments, the SKY-8201L is packaged inside a double carton, collectively referred to as the “box” in the remainder of this document.

When opening the box, you will find the SKY-8201L embedded in protective foam and the accessory box embedded to the foam. Remove the accessory box first and then pull out the unit including the protective foam using both hands. Now, remove the foam and the plastic sleeve on the unit.

After unpacking the unit, please check for any visible damage of the unit and contact your Advantech representative in case of any issue.

Please note that unless agreed otherwise power cords need to be ordered separately.

Table 1-1: Packaging List

Item	Qty.	Image	Description
Server SKY-8201L	■ 1	■ 	■ Compact 2U High Performance Server based on Intel® Xeon® Processor Scalable Family
Heatsink	■ 1	■ 	■ CPU Heatsink (1pcs). ** Will be assembled in the system if the order includes CPU.
Slide Rail (optional)	■ 1	■ 	■ 27.5-inch server slide. (A separate package)

1.3 Installation and Configuration

The SKY-8201L comes as a pre-configured system with CPUs, memory and peripherals installed in the unit. In the rare case that you procured a barebone system or need to install components in the SKY-8201L for any other reason, please refer to *Section 3.3*.

1.3.1 Chassis Slide Rail Installation

To install the chassis slide rail on the SKY-8201L chassis, please follow below instruction.

Step 1: Remove the chassis (inner) member

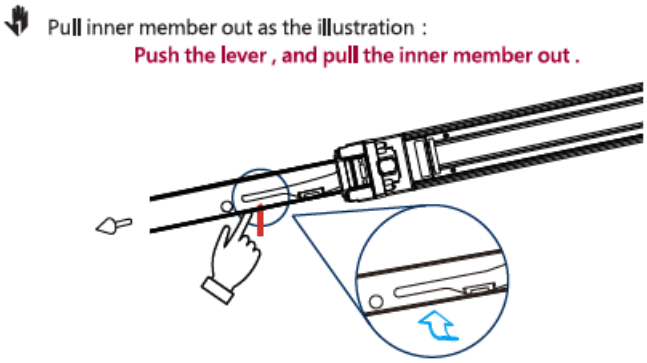

Step 2: Mount inner member to the chassis

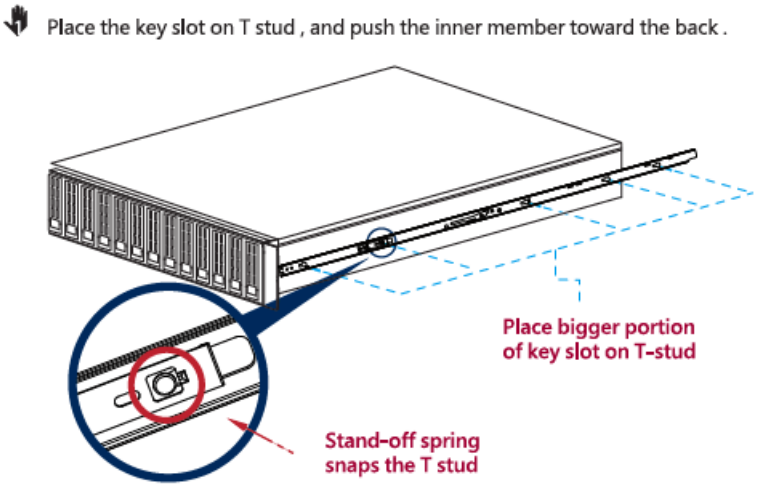

Step 3: Attach the cabinet member to the posts

Align the positioning pin to the desired complete U location , and pull the bracket forwards to lock it to the post . The bracket is locked to the post after you hear " click " sound .

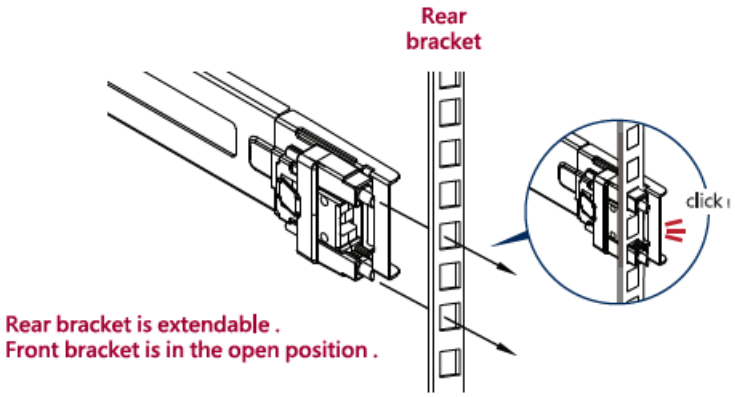

Uninstall the bracket

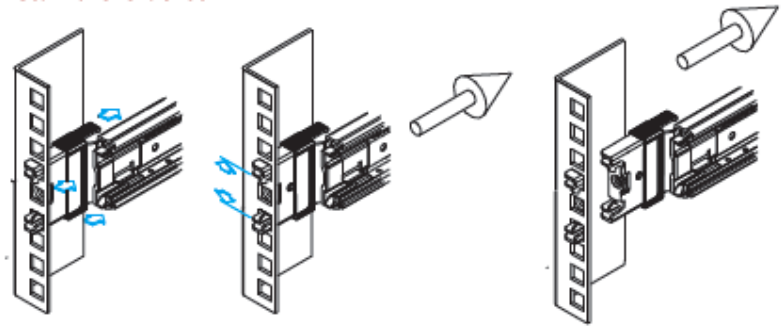

Step 4: Releasing the locking latch upward and pushing middle member forward to the rear of slide.

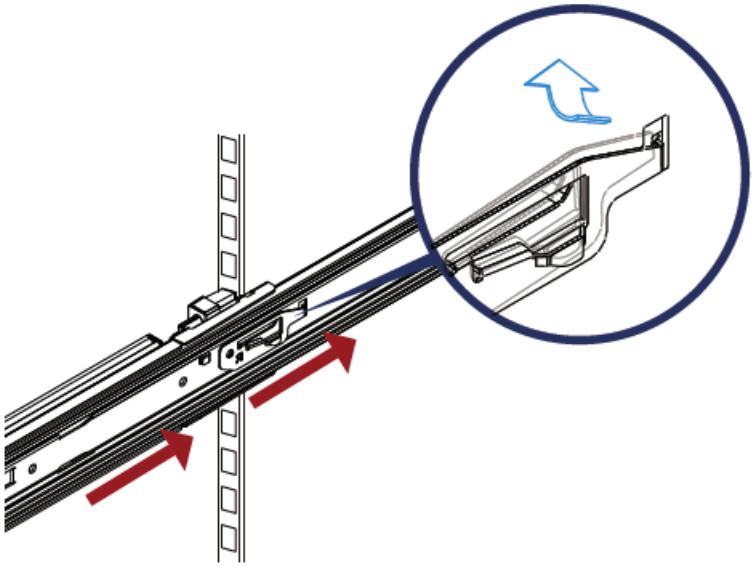

Caution!

DO NOT add any weight upon the system when chassis slide rail is installed.

Step 5: Turn the latch to locking position

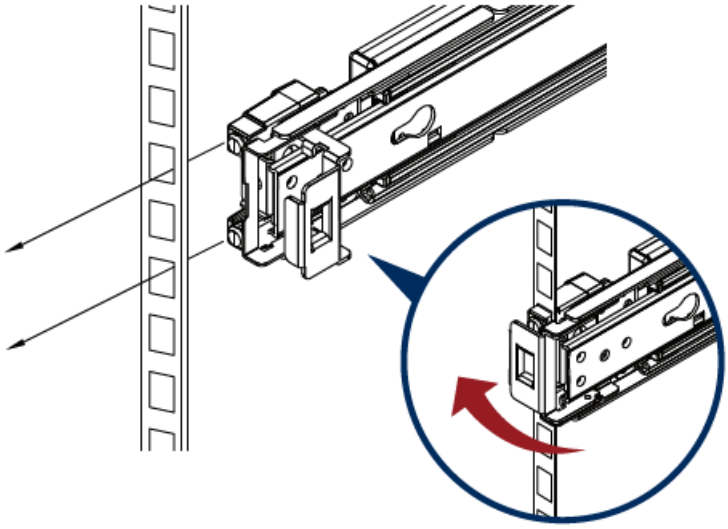

Step 6: Install the chassis

As shown , insert the inner member to the cabinet member . Make sure the ball retainer is in the open position . It might cause catastrophic damage to the slides if ball retainer is not on the front position . After the inner goes into , please push up / down the disconnect lever to unlock the slides , so that you may keep pushing the chassis to the fully closed position .

Attention please , ball retainer must be in the open position.

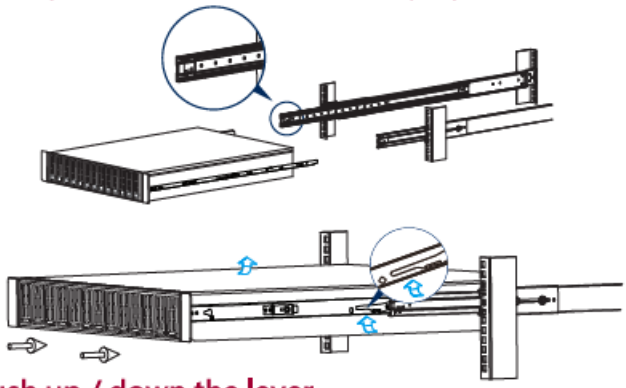

Push up / down the lever

1.3.2 Powering On

Caution!
Before connecting the SKY-8201L to the power outlet, please make sure that the power rating of the outlet and the SKY-8201L's PSU match. Please also make sure that the primary circuit and all power distribution in not overloaded. Inrush current and steady state power specifications for the SKY-8201L can be found at the type label on the bottom of the unit.

Connect the power cords to the PSU modules first and then to the power outlets.

The unit will automatically power on after power is supplied. The green LED on the front panel should be lit as the unit is under power.

Please refer to *Section 2.4* for the location of front and rear panel elements.

1.3.3 Connecting to Monitor, Keyboard and Mouse

The SKY-8201L supports a Display Port and two USB ports at the rear of the unit for connection of a monitor, keyboard and mouse. Please refer to *Section 2.4.2* for information on the location of the related connectors.

1.3.4 Connecting to the Serial Console

The SKY-8201L supports the operation via a serial terminal connection by default for scenarios where a directly attached monitor, keyboard and mouse are not available or not desirable. In this configuration, BIOS output as well as OS output are provided via a serial terminal connection.

Note!
COM1 is used for console redirection. This interface is available both at the front as well as the rear side of the unit. Please make sure you only connect to one of the two connectors as they are for alternate use, only.

The remainder of this section describes how to configure PuTTY on a Windows platform for connection with the SKY-8201 serial console as a reference. Other terminal programs may be used in a similar way as well.

Open up PuTTY and begin the configuration as shown below. Please use the actual COM port's number on the client machine instead of **"COM1"**.

1. Specify **"COM1"** under serial line and **"115200"** for speed, no parity, no flow control.
2. Check Serial for connection type.
3. Check **"VT100+"** for keypad in the keyboard submenu.
4. Check **"Colour"** or **"Both"** for **"Indicate bolded text"** in the colours submenu.
5. Click the **"Open"** button and a PuTTY terminal screen will appear.

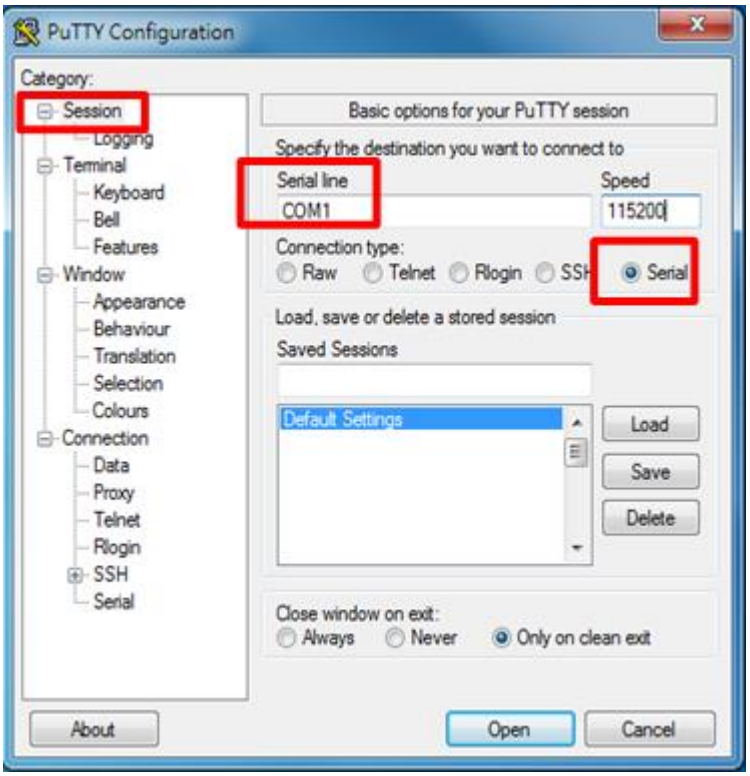

Figure 1-1: PuTTY Session Configuration

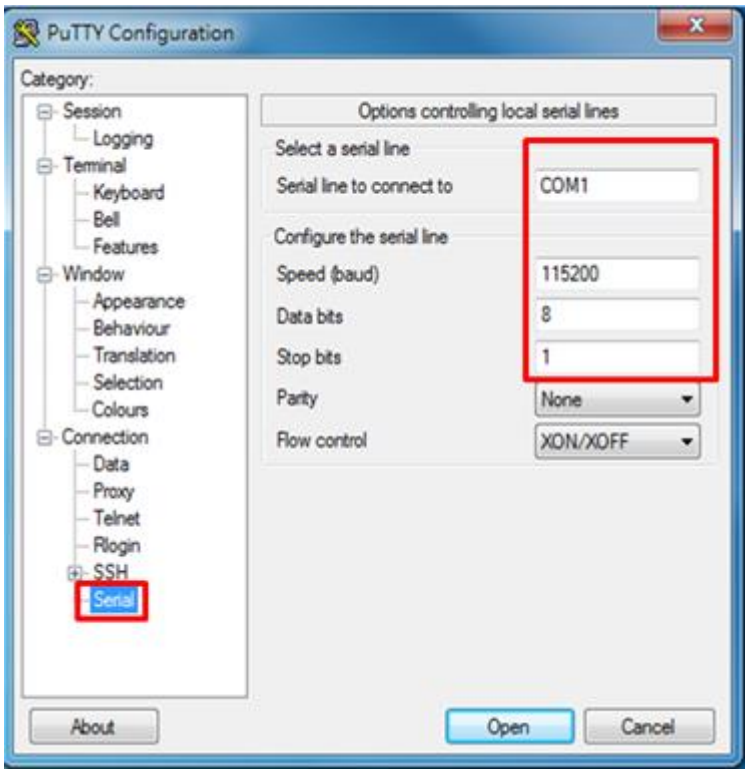

Figure 1-2: PuTTY Serial Configuration

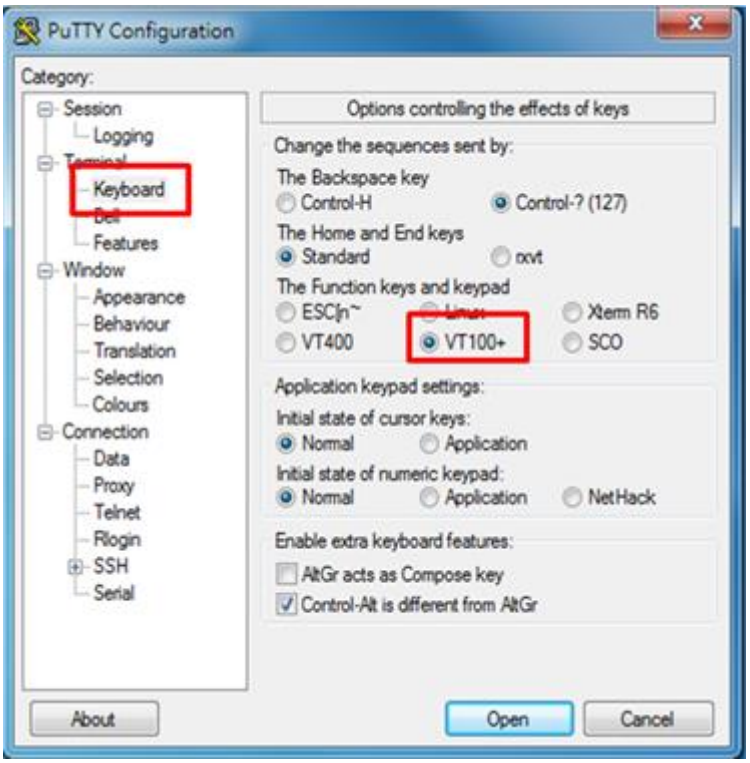

Figure 1-3: PuTTY Keyboard Settings

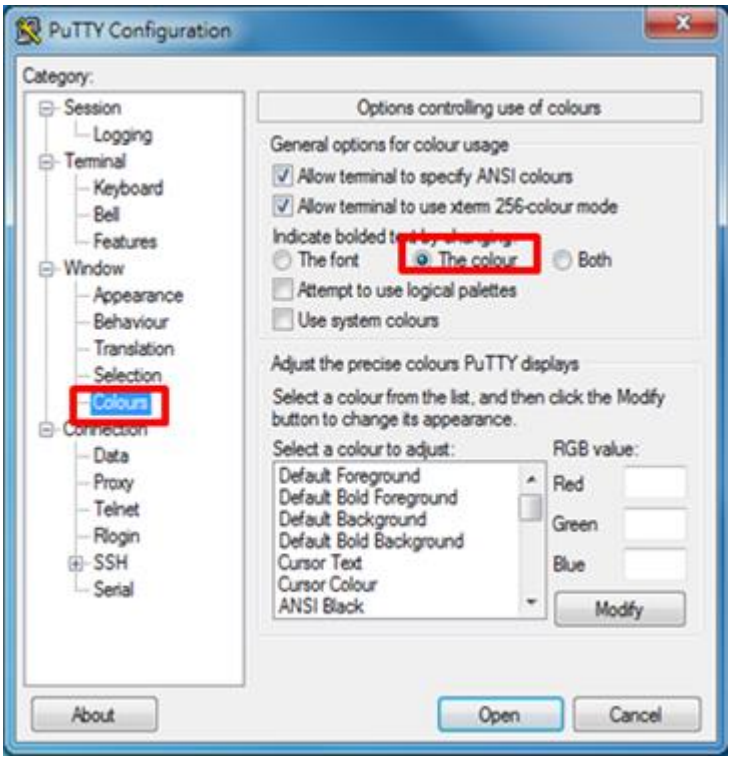

Figure 1-4: PuTTY Colour Settings

If the connection is successful you should be able to see the BIOS Power On (POST) screen after powering the unit:

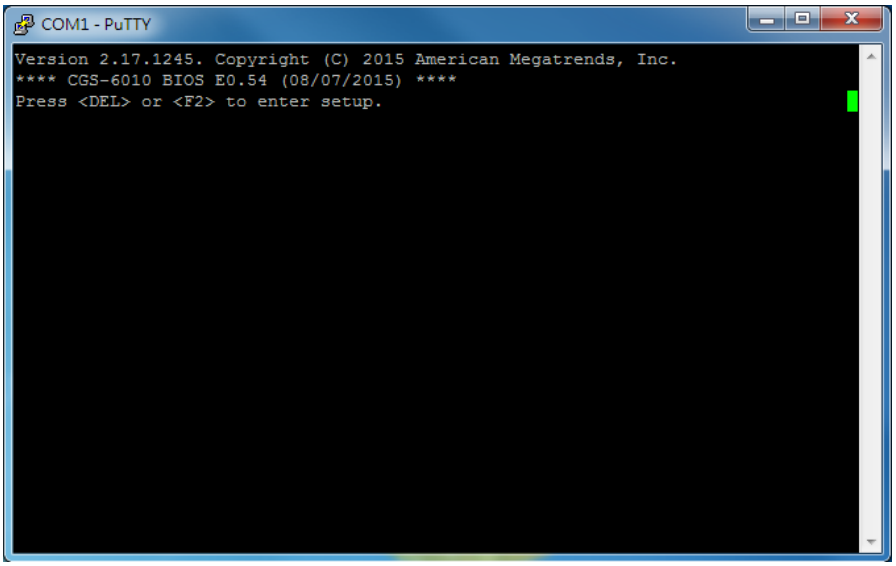

Figure 1-5: BIOS POST Screen

Note!
Please note that the BIOS is doing some initial start up work while the console is still not active. It may take a while until the BIOS POST screen appears. On the other hand, the BIOS has been optimized for minimum boot time. The BIOS will move through POST quickly and immediately try to boot an OS according to the selected boot options in the BIOS.

In case you would extend the time the BIOS displays the POST screen and waits for a key press to enter the setup menu, you can do so via the BIOS setup menu. Please refer to *Section 3.2* for details.

1.3.5 Installing an OS

Several options are available for OS installation:

- System comes with a preinstalled OS
- Install an image from a USB key
- Install an OS via network boot.

If you use Advantech's services to pre-install an OS, you can skip the following section.

1.3.5.1 Pre-Installed reference OS

If you receive this manual along with a sample unit, the system will have a reference OS installed by default. The unit will be ready to boot the reference OS from the mass storage option selected.

1.3.5.2 Installing and/or boot an OS from a USB key

To boot from a USB stick:

1. Create a Live USB stick using LiLi (available via *http://www.linuxliveusb.com/*) or a similar tool. If you want to use a serial console, please make sure to configure the Linux properly (115200bd, 8N1, no handshake). Enabling serial support in the Linux bootloader (grub or similar) as well as kernel debug messages via serial console may be valuable for potential troubleshooting.
2. Install the USB stick in one of the front ports. Make sure you have a serial console connection established via tools such as PuTTY as described earlier.
3. Power on the server.
4. The boot priority in the SKY-8201's BIOS is giving SATA devices higher priority than USB devices. This is a safety measure to avoid that any end user can tamper the unit when installed in the field with a bootable USB stick. So, in order to boot from the USB stick, you need to enter BIOS setup.

In BIOS setup menu, move to the **"Boot"** menu. You can either give the USB stick higher boot priority over SATA devices. Alternatively, you can select the USB stick in the **"Boot Override"** Menu. Boot Override will modify the boot order for a single boot process only and will automatically revert back to the original boot priority. After making these changes leave the Setup Menu via **"Save&Exit"**.

This will restart the server and it will boot from the USB stick.

1.3.5.3 Installing an OS via network boot

To install an OS via network, basically works the same way as booting an OS via USB stick described above.

The main difference is that instead of a Linux live image you need to install a network installer / a network installable image on the USB key. Network Installers or network installable iso images are available for most Linux distributions such as RedHat, Debian, Ubuntu and CentOS. For detailed information, please refer to the documentation of the related network installer and / or Linux distribution.

Please make sure you configure the network installer image properly for the Ethernet port / device of the SKY-8201 that you plan to use for the installation.

1.3.5.4 Booting an OS via network boot

The SKY-8201 supports booting over network via PXE.

To boot an OS via network, please make sure the following BIOS options In the Advanced: Network Stack Configuration Menu is configured properly:

Network Stack	Enabled	Enables the UEFI Network Stack
IPv4 PXE Support	Enabled Disabled	Enabled if PXE booting in an IPv4 network Disabled otherwise
IPv6 PXE Support	Enabled Disabled	Enabled if PXE booting in an IPv6 network Disabled otherwise

PXE boot usually does not allow for OS installation over network as the PXE client will only load a single file from the boot server. Similarly, booting Linux over network is usually a two stage process. In the first step, a boot loader such a grub or mini OS such as SysLinux are loaded via PXE from the boot server. The boot loader or miniOS then load the actual target OS which usually consists of multiple files which decompressed and installed into a RAM disk. The detailed process and required configuration of such network install will heavily depend on the target OS and boot loader / miniOS used. Please refer to the related documentation available.

PXE boot requires a DHCP server and a TFTP server in the network to complete. DHCP Server and TFTP server are commonly run on the same machine and collectively referred to as **"boot server"**.

Caution!
Setting up such a boot server implies a couple of steps. How-to guides for setting up Linux as PXE boot server are available on the internet, e.g. https://www.debian-administration.org/article/478/Setting up a server for PXE network booting.

Note!
Please note that it is recommended to setup a separate network / subnet for network booting as the DHCP required for PXE booting may conflict with existing DHCP servers in your network.

The PXE client in the SKY-8201 sends the system's GUID as part of the DHCP Request. Some boot servers have mechanisms to automatically configure the target OS image based on the client system's GUID. Using this mechanism allows to use the same boot server for network booting of different devices / servers.

1.4 Getting Help: Technical Support and Assistance

In case the unit you received is a sample for evaluation, please contact your Advantech representative. For production units, please follow the process below:

1. Visit the Advantech web site at *http://www.advantech.com/support* to find the latest information about the SKY-8201 and related products.
2. Contact your distributor, sales representative, or Advantech's customer service center for technical support if you need additional assistance. Worldwide contact information can be found on *http://www.advantech.com.*
3. Please have the following information ready before you call / be sure to include this information in your email:
   - Product name and serial number
   - Description of your peripheral attachments
   - Description of firmware and software versions installed on the product
   - A complete description of the problem
   - The exact wording of any error messages
4. In case the unit needs to be send back for repair, refer to *Appendix E* for instructions.

Chapter 2

Product Specification

2.1 Overview

The Advantech SKY-8201L is a highly configurable high performance server designed to balance the best in x86 server-class processing with maximum I/O and offload density in a 27.5" depth chassis.

The system is a cost effective, robust platform optimized for superior reliability in business critical applications including, but not limited to, communications, edge and industrial high performance computing. It is specifically designed for high density PCIe card payloads where maximum IO connectivity is needed or the integration of industry leading offload and acceleration technology is essential. The power and cooling options along with the streamlined mechanical design make it ideal for demanding applications requiring high performance acceleration technologies such as GPU, DSP and FPGA cards.

Architected around the new Intel® Xeon® Processor Scalable Family, the single-socket SKY-8201L combines cutting-edge performance with the ruggedness, reliability, and long system lifecycles required by the industry. With integrated security and compression offload based on Intel® QuickAssist technology and two onboard 10GbE ports with SR-IOV and RDMA support, the system offers best-in-class integration in a compact 2U, 27.5" deep form factor.

The SKY-8201L is designed to withstand extended environmental conditions in terms of shock, vibration and operating temperature. A replaceable front air filter is supported to cope with dust. Redundant power supplies, the ability to withstand single fan failures, redundant firmware images with failsafe upgrades and hot swappable FRUs make the SKY-8201L the platform of choice for applications requiring zero downtime. Interoperability testing is performed with a wide selection of third-party PCIe card vendors.

Figure 2-1: SKY-8201L1 Server

2.2 Product Versions

The SKY-8201L is available in the following standard configurations.
Contact your Advantech representative for availability of other configuration options.

Table 2-1: Available Product Versions

Model Name	Configurations	Bay	PSU
SKY-8201LAS-0010E	27.5" 2U server w Dual IntelR XeonR Processor, IntelR C622 chipset, AC 1200W PSU, 12 x 3.5" SSD/HDD slots, 4x 2.5" NVMe SSD slots, 4 x FH/FL slots, 2 x FH/HL slots, 2 x LP slots	12 bay 3.5" SSD/HDD	FSP AC 1200W
SKY-8201LAS-0020E	27.5" 2U server w Dual IntelR XeonR Processor, IntelR C622 chipset, AC 1200W PSU, 24 x 2.5" SSD/HDD slot, 4x 2.5" NVMe SSD slots ,4 x FH/FL slots, 2 x FH/HL slots, 2 x LP slots	24 bay 2.5" SSD/HDD	FSP AC 1200W

2.3 Technical Specifications

2.3.1 SKY-8201L System Specification

Processor System	CPU	Single CPU from the New Intel® Xeon® Processor Scalable Family up to 28 cores, 165W
	Chipset	Intel® C622 chipset (optional variants with C625/C626 and C627)
Memory	Technology	Up to 16x 2400/2666MHz DDR4 ECC Standard ECC RDIMM/LRDIMM
	Capacity	Max capacity per channel: 64GB Max total capacity per system: 1024GB
	Socket	16x 288-pin DIMM
PCIe	Expansion slot	Total 4x rear PCIe x8 (FH/FL) or 2x rear PCIe x16 (FH/FL), 2x PCIe x8 (FH/HL), plus 2x rear PCIe x8 (LP) or 2x rear PCIe x8 expansion slot for Advantech Personalization card.
IO	Front IO	2x USB2.0, PWR, Status LEDs
	Rear IO	2x GbE LAN RJ45(Management ports), 1x Display port, 1xVGA, 2x USB3.0/2.0, 2x 10GE SFP+
Ethernet	Gigabit Ethernet Interface	10/100/1000 Mbps
	10 Gigabit Ethernet Interface	1Gbps / 10Gbps
	Controller	GbE LAN1: Intel i210-AT, GbE LAN2: Intel i210-AT 10GbE SFP+ LAN1/2: Integrated into PCH, with SR-IOV and RDMA support
	Connector	RJ-45 x 2, SFP x 2
Storage	SKY-8201L1 SKU	12x 3.5", front hot-swappable, SAS/SATA HDD/SSD trays (SAS drives supported via HBA/RAID adapter on PCIe slots), additional 4x 2.5" front hot-swappable NVMe SSD trays on SKY-8201L1
	SKY-8201L2 SKU	24x 2.5", front hot-swappable, SAS/SATA HDD/SSD trays (SAS drives supported via HBA/RAID adapter on PCIe slots), additional 4x 2.5" front hot-swappable NVMe SSD trays on SKY-8201L2.
Power Supply	Power Rating	1200W, Max: +12V/70A, +5Vsb/3A, per PSU
	Input	Two 1200W (1+1) redundant AC PSU (AC) 100– 240Vac, 50– 60Hz, 12– 7A, per PSU
Environment	Humidity operational (non-condensing)	5% to 95%
	Operational temperature	0℃ (32℉) to 40℃ (104℉)
	Storage temperature	-40℃ (-40℉) to 70℃ (158℉)
Cooling	Chassis Fan	Four replaceable fans

	Thermal Control	Two separate thermal zones for motherboard and FL PCIe cards
	Reliability	Resilient to single fan failure
	Air Filter	NA (By request)
System Management	Advantech BMC	- Aspeed AST2500 BMC - Advanced Lights Out Management compliant to IPMI2.0 with security and availability enhancements - iKVM Support - Configurable shared or dedicated NIC support
Physical	Dimension (W x D x H)	438.4 x 699.8 x 88.1 mm (17.26" x 27.5" x 3.46")
	Weight (N.W)	25kg

2.3.2 System Dimensions

The system dimensions (in mm) are shown below:

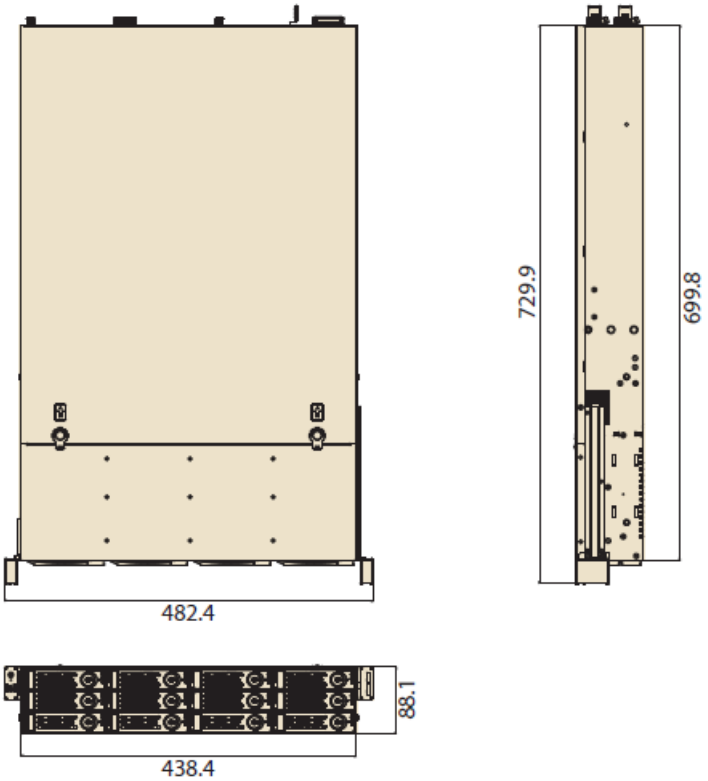

Figure 2-2: System Dimensions

2.4 Detail Description

2.4.1 SKY-8201L1&L2 Front Elements

Figure 2-3: SKY-8201L1 Front Panel

Table 2-2: L1 Front Elements

Item	Element	Description
A	Front LEDs	■ Front LEDs and buttons
B	3.5” Drive Bays	■ 12 x 3.5” Hot swappable SAS/SATA HDD/SSD (4 x 2.5” NVMe SSD on top layer)
C	Front I/O	■ Front I/O board with 2x USB 2.0 ports

Figure 2-4: SKY-8201L2 Front Panel

Table 2-3: L2 Front Elements

Item	Element	Description
A	Front LEDs	■ Front LEDs and buttons
B	2.5” Drive Bays	■ 24 x 2.5” Hot swappable SAS/SATA HDD/SSD (4 x 2.5” NVMe SSD on the first 4 bays)
C	Front I/O	■ Front I/O board with 2x USB 2.0 ports

2.4.1.1 LEDs Details

The SKY-8201L supports an array of status and alarm LEDs at the front & rear panel. The locations and the functions of front LEDs are described below.

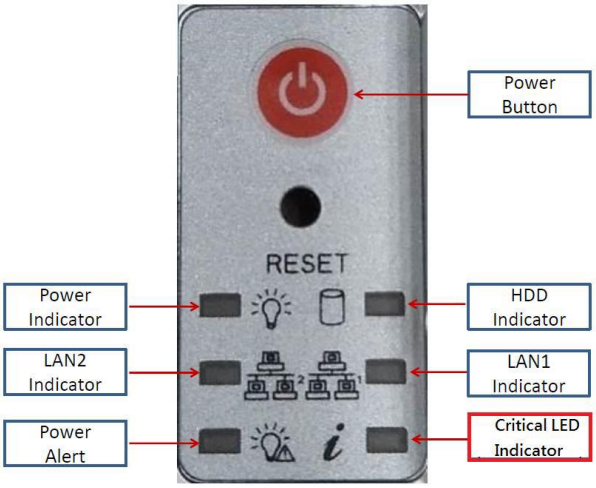

Figure 2-5: Status LEDs (Front Panel)

Table 2-4: Status LEDs

Label	Color	Description
i	Blue/Red	Critical LED
2	Green	NIC#2 (MGMT2 RJ45) Link/Act LED
1	Green	NIC#1 (MGMT1 RJ45) Link/Act LED
	Amber	HDD Act LED USB2.0 ports
	Green	Power State LED

2.4.1.2 Front Button Details

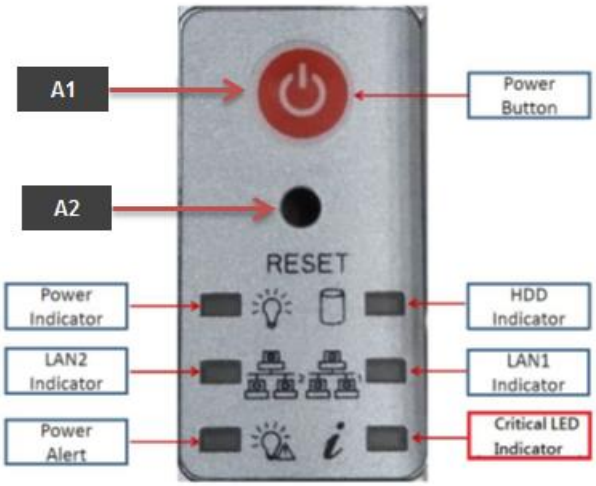

Figure 2-6: Front Buttons

Table 2-5: Front Buttons

Item	Element	Description
A1	Power Button	■ Power button to power up or down the unit
A2	Reset Button	■ Reset the system

2.4.1.3 Fan Module Details

The SKY-8201L has four hot swappable fan modules behind the storage. Each of the fan modules carries high performance fans for optimized air flow. To extract or install the fan module please remove the top cover first.

2.4.1.4 SKY-8201L1&L2 Disk Bay Details

The SKY-8201L1 supports 12 hot swappable 3.5” HDDs/SSDs at the front.

Figure 2-7: SKY-8201L1 Disk Bays

Table 2-6: L1 Disk Bay

Item	Element	Description
F1	**3.5” Disk Tray**	■ Disk #1
F2	**3.5” Disk Tray**	■ Disk #2
F3	**3.5” Disk Tray**	■ Disk #3
F4	**3.5” Disk Tray**	■ Disk #4
F5	**3.5” Disk Tray**	■ Disk #5
F6	**3.5” Disk Tray**	■ Disk #6
F7	**3.5” Disk Tray**	■ Disk #7
F8	**3.5” Disk Tray**	■ Disk #8
F9	**3.5” Disk Tray**	■ Disk #9
F10	**3.5” Disk Tray**	■ Disk #10
F11	**3.5” Disk Tray**	■ Disk #11
F12	**3.5” Disk Tray**	■ Disk #12

Each Disk Bay has an integrated disk tray that includes a handle, locking mechanism as well as drive LEDs.

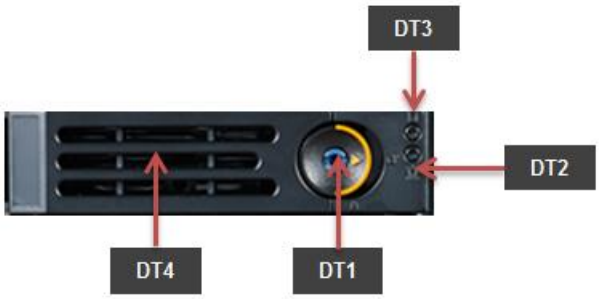

Figure 2-8: SKY-8201L1 Disk Tray

Table 2-7: L1 Disk Tray

Item	Element	Description
DT1	**LOCK**	■ Move it to the right to open tray handle
DT2	**LED**	■ Activity LED (green)
DT3	**LED**	■ Status LED (amber)
DT4	**Handle**	■ Tray handle

The SKY-8201L2 supports 24 hot swappable 2.5” HDDs/SSDs at the front.

Figure 2-9: SKY-8201L2 Disk Bays

Table 2-8: L2 Disk Bay

Item	Element	Description
F1	**2.5” Disk Tray**	■ Disk #1
F2	**2.5” Disk Tray**	■ Disk #2
F3	**2.5” Disk Tray**	■ Disk #3
~	**2.5” Disk Tray**	■ Disk #4~23
F24	**2.5” Disk Tray**	■ Disk #24

Each Disk Bay has an integrated disk tray that includes a handle, locking mechanism as well as drive LEDs.

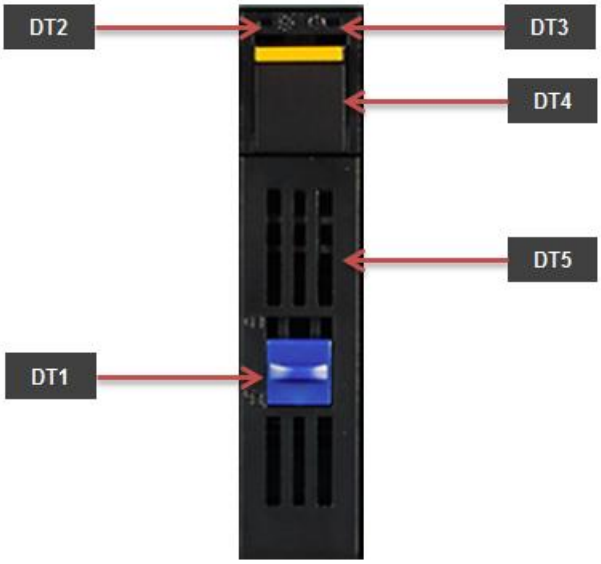

Figure 2-10: SKY-8201L2 Disk Tray

Table 2-9: L2 Disk Tray

Item	Element	Description
DT1	**LOCK**	■ Locks the tray in the bay when in the left position
DT2	**LED**	■ Activity LED (green)
DT3	**LED**	■ Status LED (amber)
DT4	**Button**	■ Pushing the button will allow the tray handle to open if unlocked
DT5	**Handle**	■ Tray handle

2.4.2 Rear Panel

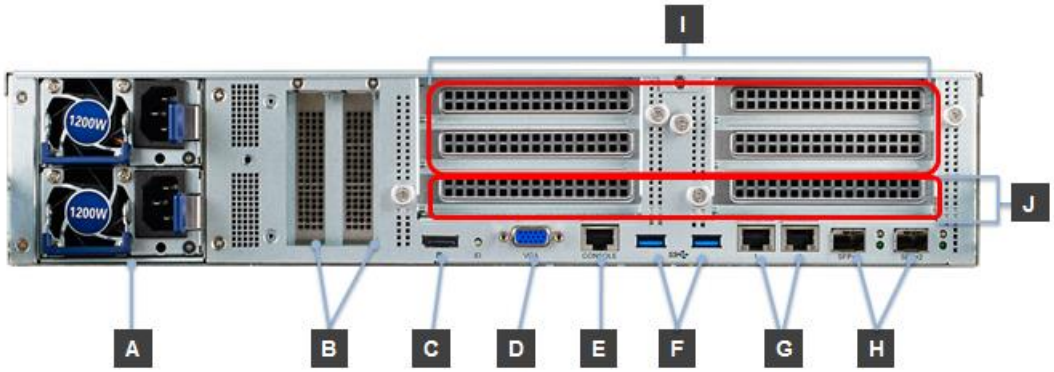

Figure 2-11: System Rear View

Table 2-10: Rear Panel List

Item	Element	Description
A	PSU Module	■ Hot swappable, redundant CRPS AC PSU
B	Advantech NIC Card Slot	■ 2x Low profile PCIe gen3 x8 extension slot
C	Display Port	■ Display Port
D	VGA Port	■ VGA Port
E	Console Port	■ Console Port
F	USB Port	■ 2x USB 3.0 Type A ports
G	Mgmt Port	■ 2x Copper GbE management ports
H	SFP+ Port	2x 10GbE SFP+ ports
I	FH/FL PCIe Slot	4x FH/FL single deck PCIe card slots
J	FH/HL PCIe Slot	2x FH/HL (or LP / Advantech PersCard) single deck PCIe card slots

2.4.3 Inside the System

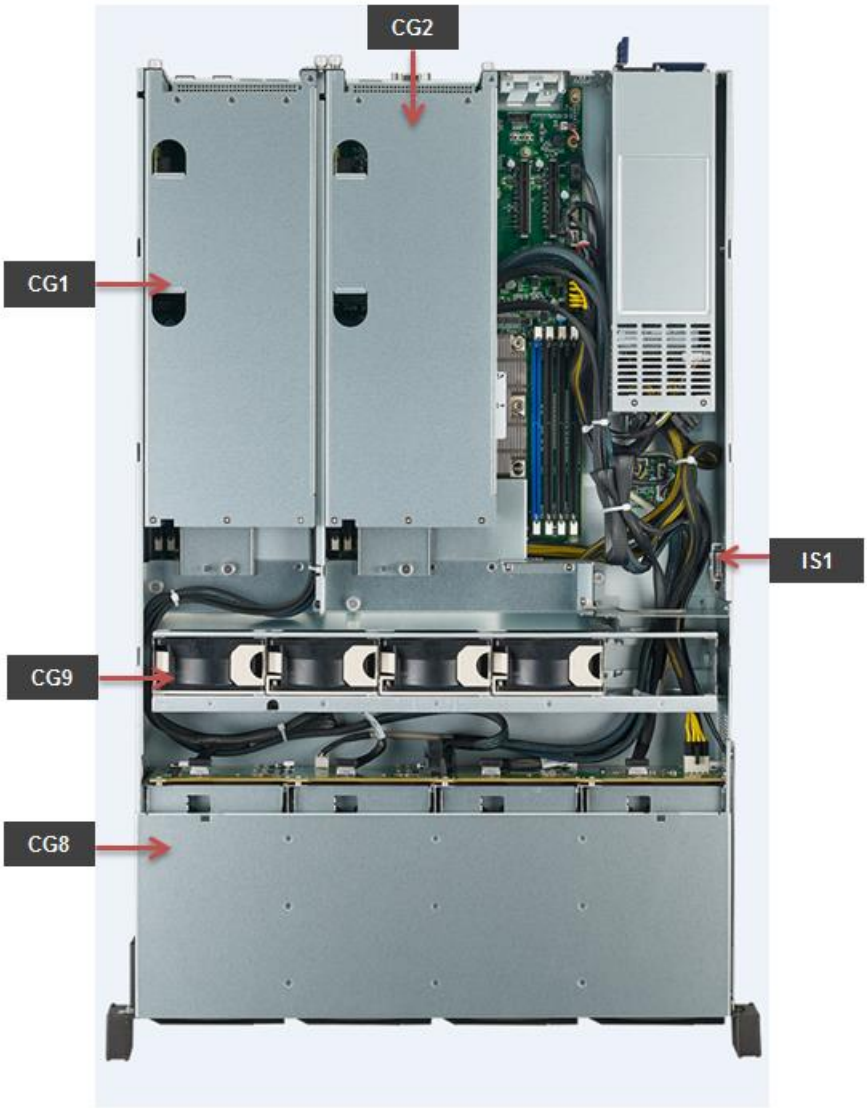

Figure 2-12: System Top View (Cover Removed)

Table 2-11: Component List

Item	Element	Description
IS1	**Intrusion Switch**	Switch for chassis intrusion detection
CG1	**PCIe Card Cage**	■ **Cage for "right cards**
CG2	**PCIe Card Cage**	■ **Cage for " left cards**
CG8	**Drive Tray Assembly**	■ **2.5"/3.5" drive tray assembly including SAS backplane**

CG9	**Fan Cages**	■ **Cages hosting fan modules**

2.4.4 System Block Diagram

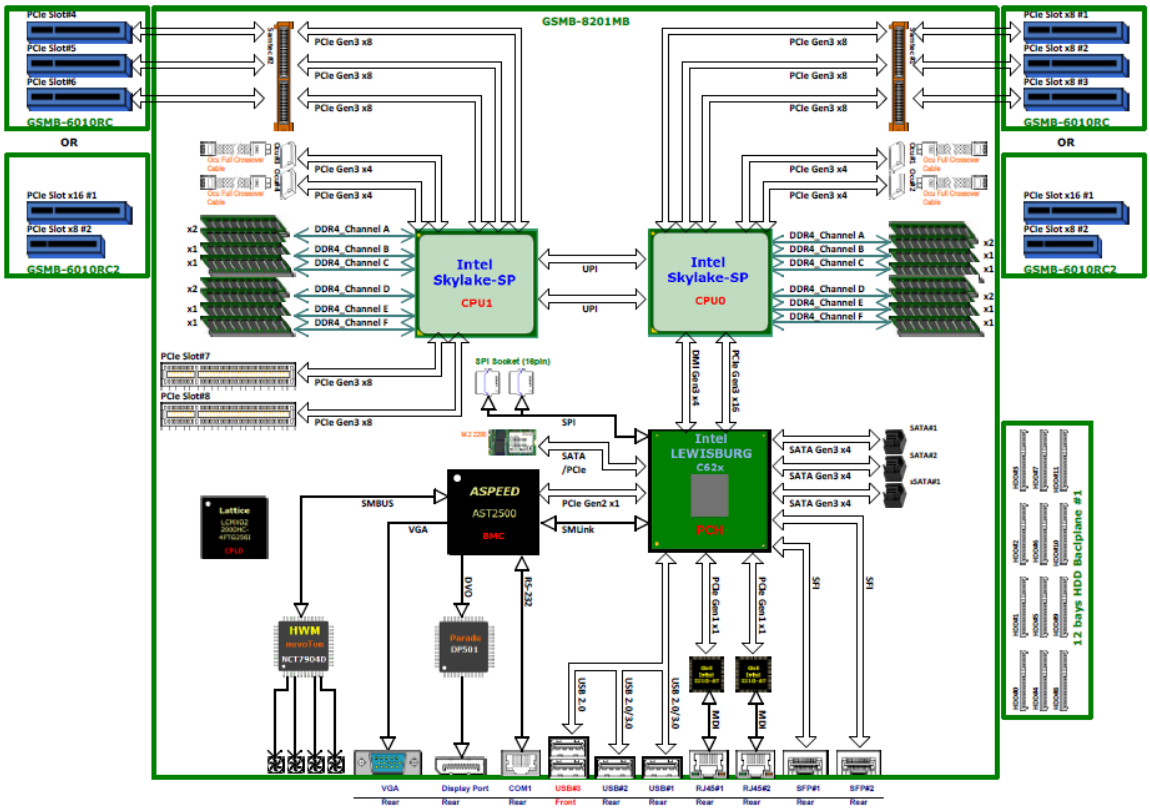

Figure 2-13: SKY-8201L1 Block Diagram

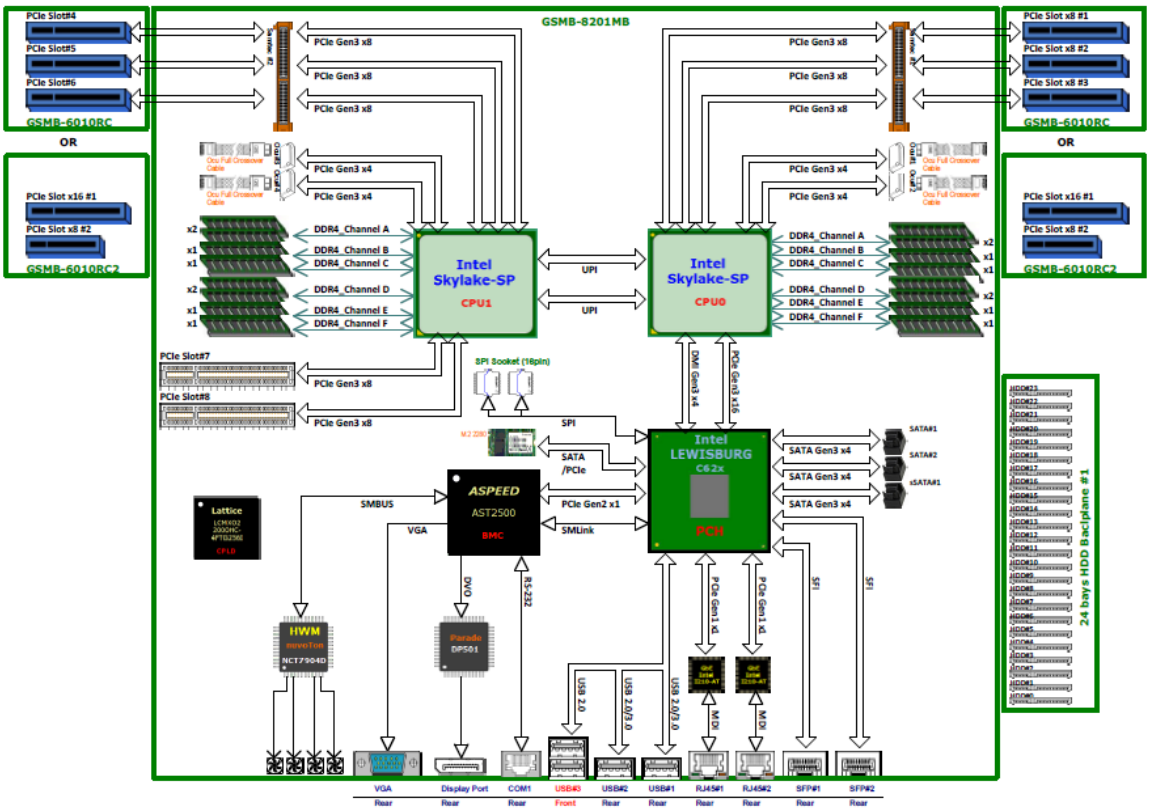

Figure 2-14: SKY-8201L2 Block Diagram

2.4.5 Processor(s)

The SKY-8201 supports single Intel® Xeon® Processor Scalable Family. The table below gives an overview of the processor SKUs for communication infrastructure which can be supported on the SKY-8201:

Table 2-12: Intel® Xeon® Processor SKUs for Communications Infrastructure

CPU SKU	Cores/Frequency/Last Level Cache	HT/QPI/DDR4	TDP	10 Year Reliability
Bronze 3106	8C/1.7GHz/11MB	No/9.6GT/s/2133	85W	Yes
Silver 4110	8C/2.1GHz/11MB	Yes/9.6GT/s/2400	85W	Yes
Silver 4114T	10C/2.2GHz/13.75MB	Yes/9.6GT/s/2400	85W	Yes
Silver 4116	12C/2.1GHz/16.5MB	Yes/9.6GT/s/2400	85W	Yes
Gold 5118	12C/2.3GHz/16.5MB	Yes/10.4GT/s/2400	105W	Yes
Gold 5120T	14C/2.2GHz/19.25MB	Yes/10.4GT/s/2400	105W	Yes
Gold 6130T	16C/2.1GHz/22MB	Yes/10.4GT/s/2666	125W	Yes
Gold 6138	20C/2.0GHz/27.5MB	Yes/10.4GT/s/2666	125W	Yes

Other CPU SKUs can be supported on the SKY-8201 but thermal limitations and / or life cycle restrictions may apply. If you're interested in the support of other CPU SKUs, please contact your Advantech representative.

For details on the features of the Intel® Xeon® Processor Scalable Family, please refer to documentation available from Intel.

2.4.5.1 Processor Feature Details

- Supports a 1.0 MB Mid Level Cache (MLC) per core, non-inclusive with the LLC
- Supports Intel Hyper-Threading Technology (Intel® HT Technology)
- Support a virtual address space of 48 bits and a physical address space of 46 bits.
- The processor supports Intel Hyper-Threading Technology (Intel® HT Technology)
- Intel® QuickData Technology: For efficient, high bandwidth data movement
- Implements a slice of the total Intel UPI Coherency Agent (CA) function
- Supports up to 1.35 MB non-inclusive Last Level Cache (LLC)
- Implements Intel UPI Home Agent (HA) functions

2.4.6 Memory

A total of 16 DDR4 DIMMs are supported on the SKY-8201. One DIMM socket per DDR4 Channel with total 16 DDR4 Channels supported for two Skylake-SP Processor.

2.4.6.1 Memory Sub-System

- Skylake-SP Processor Supports 16x DDR4 Channels
- Support DDR4 RDIMM and LRDIMM
- Support DDR4 Memory Speeds : 2666, 2400, 2133, 1866 MT/s
- 64-bit wide Channels plus 8-bits of ECC Support for Each Channel
- DRAM Density : 4Gb, 8Gb
- DRAM Ranks : RDIMM (Single Rank, Dual Rank)
- LRDIMM (Single Rank, Dual Rank, Quad Rank, Octa Rank)
- Integrated Dual SMBus Master Controllers
- Support Apache Pass DIMMs

2.4.6.3 Validated Memory Modules

The following list summarizes the modules validated on the SKY-8201

Table 2-13: Validated DIMMs

Vendor	P/N	Capacity	Speed / Architecture
ATP	96D4-32G2666ER-AT	32G	DDR4-2666
ATP	96D4-16G2666ER-AT	16G	DDR4-2666
Micron	*To be updated*	32G	DDR4-2666
Micron	*To be updated*	16G	DDR4-2666
ATP	96D4-32G2400ER-AT	32G	DDR4-2400
ATP	96D4-16G2400ER-AT 96D4-16G2400ER-ATL	16G	DDR4-2400
ATP	96D4-8G2400ER-AT 96D4-16G2400ER-ATL	8G	DDR4-2400
ATP	96D4-4G2400ER-AT	4G	DDR4-2400
Transcend	AQD-D4U16R21-SE	16G	DDR4-2133

Please contact you Advantech representative for the most recent list of validated peripherals or if you would like to use modules not listed. Other configurations are available on request.

2.4.7 QuickAssist Accelerator

QuickAssist is used by applications running on the IA cores to accelerate and offload processing. The integrated QuickAssist accelerator of the PCH appears to software as a PCIe endpoint and is used as a look-aside coprocessor. It supports the features below:

1. Symmetric Cryptographic Functions
   a. Cipher Operations
   b. Hash/Authenticate Operation
   c. Cipher-Hash Combined Operation
   d. Key Derivation Operation

2. Public Key Functions
   a. RSA Operation
   b. Diffie-Helman Operation
   c. Digital Signature Standard Operation
   d. Key Derivation Operation
   e. Elliptic Curve Cryptography: ECDSA* and ECDH*

For more information, please refer to documentation available from Intel.

Note!
The default PCH sku of SKY-8201 is C622 without QuickAssist Accelerator. Please contact your Advantech representative for the most recent list of validated PCH sku or if you would like to use the PCH sku not listed. Other configurations are available on request.

2.4.8 Network Interface (On board)

The SKY-8201 supports two onboard network ports intended as management Ethernet ports. Connectors are located at G and labeled “1” and ”2”.

The two management ports are implemented using Intel i210 Ethernet Controllers with PCIex1 connectivity to the PCH and also provide access to the BMC over LAN via NC-SI interfaces.

2.4.9 PCIe Expansion

The SKY-8201L supports a total of eight PCIe extension slots for 4 full height / full length, 2 full height / half length low profile PCIe card, and 2 low profile Advantech PCIe PersCard. The full height / full length and half length extension slots support a PCIex8 gen3 interface, and Advantech PCIe PersCard slot supports a PCIex4 gen3 interface. (Four full height / full length PCIe x8 extension slots can be replaced as two PCIe x16 extension slot.)

Figure 2-15: PCIe Cages (Top View)

2.4.10 TPM

An 1.2 or 2.0 Trusted Platform Module is supported on the SKY-8201L. This module is TCG-compliant and has passed Common Criteria EAL4+ certification.

2.4.11 Mass Storage

One M.2 2280 SSD is supported on the SKY-8201L located at M1

Figure 2-16: Location of mSATA Sockets

2.4.12 BIOS

The SKY-8201 BIOS is based on Advantech's APTIO BIOS and compliant to the UEFI, SMBIOS and ACPI specifications.

The BIOS performs probing, initialization and configuration of the SKY-8201 and initializes the OS boot process at the end of POST (Power On Self Test).

Regular BIOS output as well as the setup menu are displayed via Display Port or serial console. Please refer to *Section 3.2*. the console connection process.

The BIOS Setup Menu is described in detail in *Section 3.2*. BIOS Error Codes used during POST are described in *Appendix B*.

Note!
Please note that the SKY-8201L does not have any onboard POST Code LEDs onboard. POST Codes are logged via the BMC's POST Code Sensor, though.

All BIOS configuration parameters bare stored in NVRAM, a dedicated section of the BIOS flash chip. Parameters are no longer stored in legacy CMOS RAM by the platform BIOS. I.e. BIOS configuration parameters will not be lost due to an empty RTC battery.

2.4.12.1 Password Protection

The BIOS supports and administrator password to restrict access to the BIOS setup menu to qualified and trusted personal, only.

2.4.12.2 BIOS Defaults

The BIOS comes with a set of configuration parameters when shipped by Advantech referred to as “Optimized Defaults” or “factory defaults”. The user can change BIOS settings via the setup menu either temporarily or permanently by saving the changes as “User defaults”.

The BIOS loads the User defaults automatically if these have been defined via the setup. If no User defaults have been defined; the BIOS will load the factory defaults.

2.4.12.3 PCIe Tree

The BIOS also performs an enumeration of all PCIe resources, builds a bus/device map and assigns resources to the PCIe devices. Most OSes perform a reallocation of resources during start up. However, the PCIe bus/device map will not be changed by the OS. The table below gives an overview of the PCIe devices and their corresponding system function:

2.4.13 Advanced Platform Management

Advanced Platform Management is supported via an integrated BMC running IPMI2.0 compliant system management firmware. Several enhancements have been made to standard white box server management code to enhance reliability and serviceability of the system including but not limited to:

- Improved thermal management to cover special scenarios as well as fan degradation / failure
- Chassis intrusion and FRU presence detection
- Redundant BMC and BIOS flashes for maximum reliability
- Fail safe BMC and BIOS upgrades using industry standard HPM.1 mechanisms and tools including automatic rollback on an upgrade failure
- Remote updates of firmware as long as primary power is connected to the unit
- BIOS Watchdog for reliable POST process and improved POST code sensor
- Time synchronization between the BMC and x86 host at startup for consistent event logs
- System FRU Information synchronization to the host via standard DMI tables
- Large system event log for efficient troubleshooting
- Capability to log system events from the x86 host
- Enhanced security (more information available under NDA)

For a detailed description of Advanced Platform Management features, the BMC commands and sensor lists please refer to the SKY-8201 BMC User's Guide.

2.4.13.1 Hardware and Environmental Monitoring

BMC monitors all critical voltages on the SKY-8201L:

- Main system voltages (12V, 5V, 3.3V)
- Standby voltages (5V_SB, 3.3V_SB)
- RTC battery
- CPU core and IO voltages
- DRAM voltages
- PCH voltages

Moreover, the following temperatures are supervised:

- Air inlet and outlet temperatures
- CPU temperatures
- DIMM temperatures (if DIMMs used support a temperature sensor)
- PCH temperature
- PSU temperature (via PMBus)

2.4.13.2 Thermal Management

The system thermals are managed by the BMC using a Smart Fan algorithm. Smart Fan is a fan control algorithm that provides proper cooling to the system while minimizing noise and maximizing fan MTBF. The Smart Fan parameters have been optimized for the SKY-8201L and are automatically loaded at system start time.

The Smart Fan algorithm uses the CPU temperatures as basis as the CPUs are the hottest elements in the system under normal circumstances. Advanced platform management introduces a special safe guard mechanism to assure normal operation under special conditions: Should any other thermal sensor than the CPUs cross an upper threshold, the BMC will override the Smart Fan control and turn all fans to full on as long as such special condition applies. Advanced Platform Management takes similar actions when it detects a fan failure or severe degradation.

Air inlet is through the front cover and the integrated air filter (if present). Five fan modules, each consisting of two fans soak in the air and push it over the motherboard as well as the PCIe card cages. Air outlet is through the rear side of the unit.

The PSU modules have integrated fans which provide for independent cooling of the PSU modules and exhaust air through the rear panel.

All fans are supervised by the BMC for proper operation.

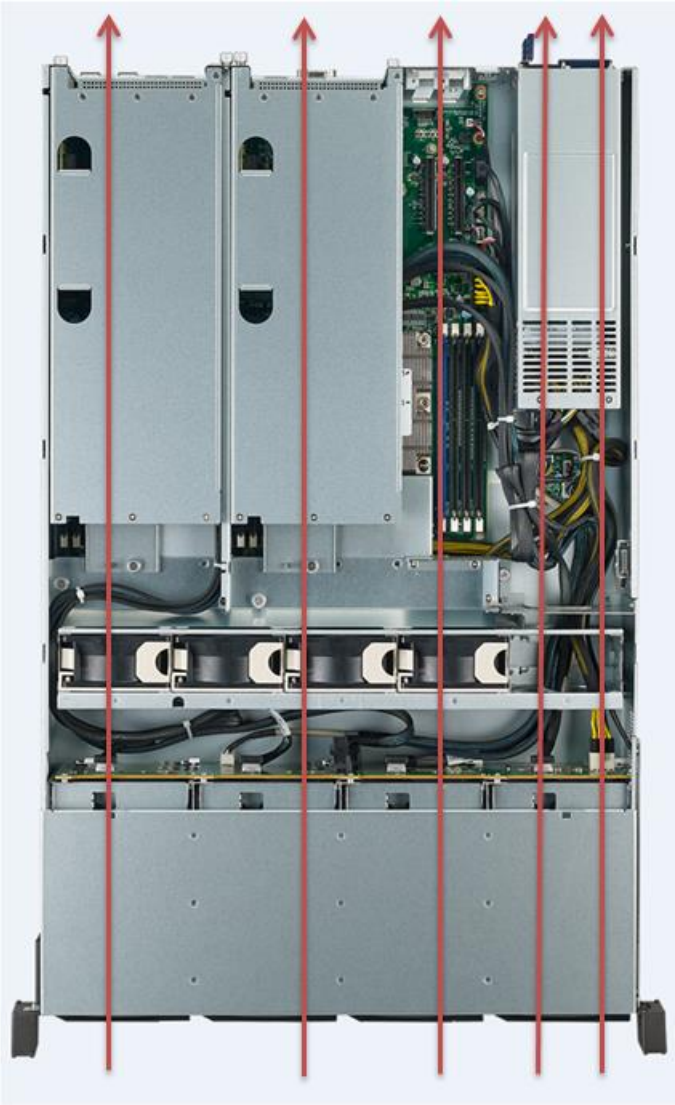

Figure 2-17: System Airflows and Fans

2.4.14 Power Supplies

The SKY-8201L supports 1200W redundant AC PSU.

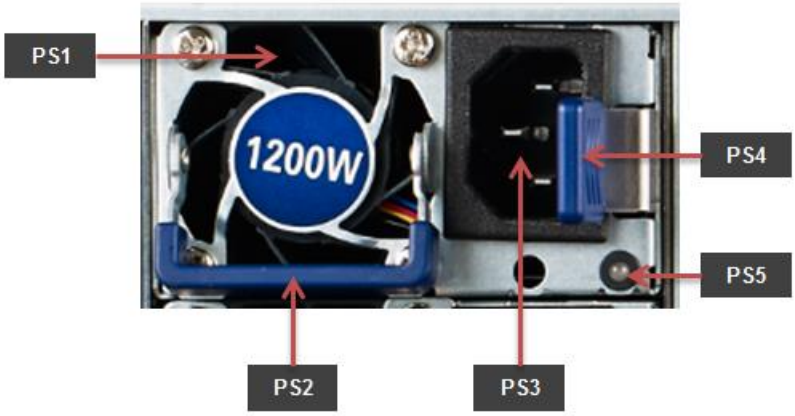

Figure 2-18: AC PSU Details

Table 2-14: AC PSU Details

Item	Element	Description
PS1	Fan	PSU fan and air outlet area
PS2	Handle	Handle for extraction / insertion
PS3	Power Connector	IEC 320 C-14 power connector
PS4	Lock	Lock for locking /unlocking the module. Pull left to unlock.
PS5	Status LED	Green LED indicating normal operation when lit Amber LED indicating abnormal operation when lit

Caution!

1. *DO NOT remove the PSU before unplugging the power cable (power cord).*
2. *For 1+1 redundant system power, only ONE PSU is allowed to be extracted at one time.*
3. *DO NOT leave the slot empty when extracting the PSU, the alternative PSU MUST be inserted immediately for safety purpose.*

Caution!

4. *DO NOT remove the PSU before unplugging the power cable (power cord).*
5. *For 1+1 redundant system power, only ONE PSU is allowed to be extracted at one time.*
6. *DO NOT leave the slot empty when extracting the PSU, the alternative PSU MUST be inserted immediately for safety purpose.*

2.5 Advanced Platform Features

2.5.1 Intrusion Detection

The SKY-8201L supports intrusion detection by default. Removing or lifting the top cover will activate an intrusion detection switch. Chassis intrusion will be signaled via an IPMI event by the BMC.

2.5.2 Watchdogs

The SKY-8201L provides two programmable watchdogs.

The first watchdog is based on Intel's TCO timer and is integrated in the PCH. It may be used to reset the system in case it bites due to malfunctioning application software to restore the unit to a known good state. The TCO watchdog timer is supported under Linux via a kernel driver (iTCO_wdt.ko). Please refer to Linux as well as PCH documentation should you need more details.

The 2nd watchdog is implemented as an IPMI compliant watchdog timer in the BMC and supports more sophisticated operation modes such as pre-timeout interrupts. Standard utilities such as ipmitool can be used for configuring and strobing this watchdog. Please refer to the IPMI specification for a detailed description of the BMC watchdog features and operation.

2.6 Available Accessories and Related Products

2.6.1 Accessories

The following accessories are available for ordering. Please contact your Advantech representative for a list of available and supported peripherals such as memory modules, hard disks and solid state drives.

Table 2-16: Accessories

Order Number	Description
1702002600-02	Power Cord 3P UL/CSA(USA) 125V 10A 1.83M 180D
1702002605-02	Power Cord 3P European 10A/16A 250V 1.83M 90D
1702031801	Power Code 3P (UK) 5A-Fuse 183cm
1700000237-01	Power Cord 3P PSE 12A 125V 1.83M Japan

2.6.2 Spare Parts

The following spare parts are available for ordering.

Table 2-17: Spare Parts

Order Number	Description

2.6.3 Related Products

The following related products are available for ordering.

Table 2-18: Related Products

Order Number	Description
SKY-8201SAS-0000E	20” 2U server w GSMB-8201, Dual Skylake-SP socket, redundant AC 1400W PSU, 4x 2.5” SAS/SATA bay, 4x FH/FL rear slots, 2x FH/HL ,2x LP rear slot
SKY-8201LAS-0010E	27.5” 2U server w GSMB-8201, Dual Skylake-SP socket, redundant AC 1200W PSU, 12x 3.5” bay (8x SAS/SATA + 4x NVMe), 4x FH/FL rear slots, 2x FH/HL ,2x LP rear slot
SKY-8201LAS-0020E	27.5” 2U server w GSMB-8201, Dual Skylake-SP socket, redundant AC 1200W PSU, 24x 2.5” SAS/SATA bay (20x SAS/SATA + 4x NVMe), 4x FH/FL rear slots, 2x FH/HL ,2x LP rear slot

Chapter 3

Configuration and Service

3.1 Jumper Settings

There are no jumpers on the SKY-8201L intended for customer use.

3.2 BIOS Setup Menu

This section describes the SKY-8201L's UEFI BIOS based on AMI's APTIO BIOS.

Users can modify BIOS settings and control the special features of the SKY-8201L using the BIOS setup menu.

Note!
Please note that Advantech supports shipping the SKY-8201L with custom BIOS defaults to simplify the deployment and integration for our customers. Please contact your Advantech representative if you want to receive more information regarding this service.

The BIOS Setup Menu can be entered via the BIOS POST screen displayed on the console interface:

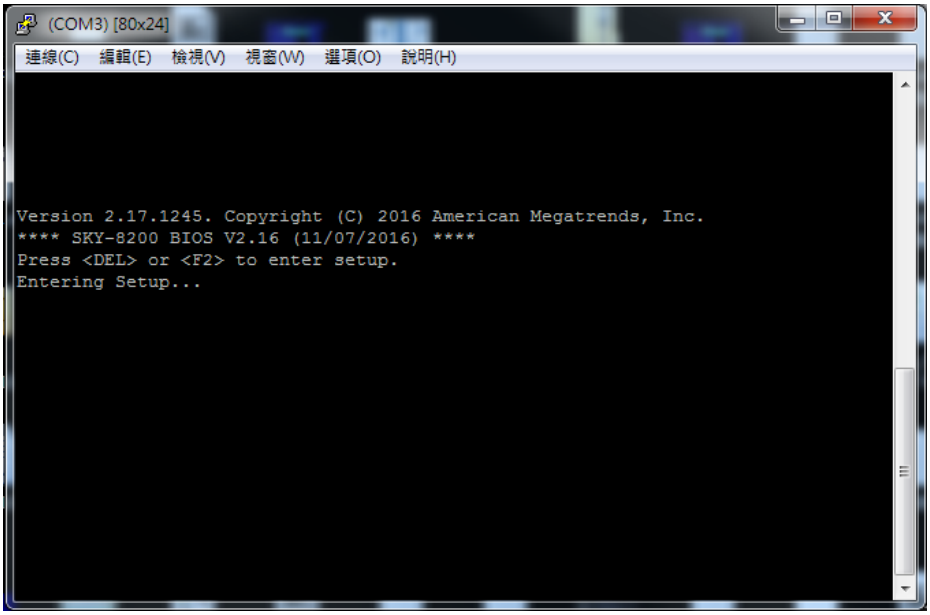

Figure 3-1: BIOS POST Screen

BIOS Setup can be entered by hitting **<DEL>** or **<F2>** keys during POST.

The BIOS setup menu screens have a few main elements as shown below. The menu bar displays the selectable menu pages as tabs. The parameter window displays and allows configuration of the settings available in a given menu page or a submenu thereof. Auxiliary text providing information about the selected setup item is displayed in the top right corner.

Figure 3-2: BIOS Setup Screen Organization

3.2.1 Main Setup Menu

If security protection has been enabled previously (see *Section 3.2.4*), you will be prompted for the BIOS password upon entering the BIOS Setup. After a successful check or if password protection has not been enabled, users will see the Main Setup screen shown below. Users can always return to the Main setup screen by selecting the Main tab.

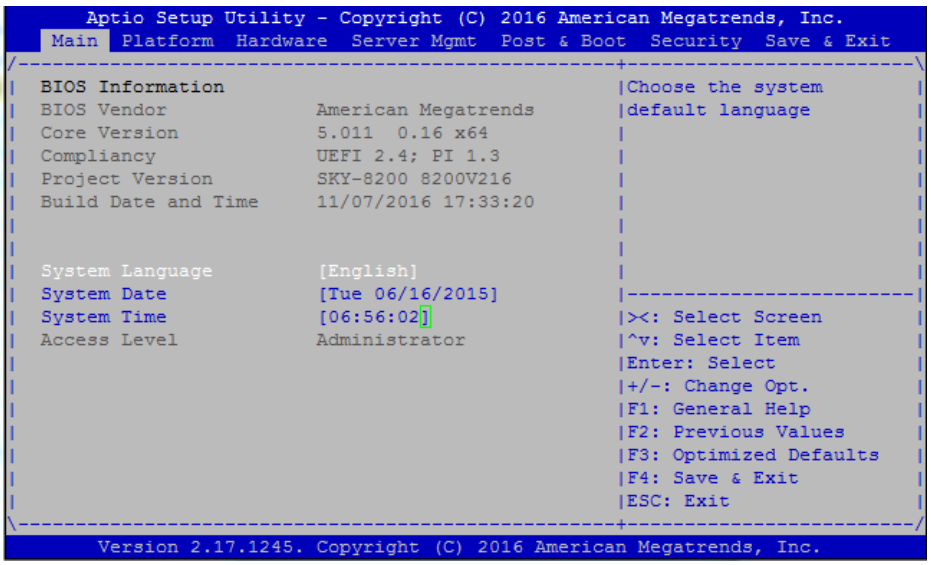

Figure 3-3: BIOS Setup Main Screen

The main setup page displays system a summary of system and BIOS status and configuration information. The fields on this page are read-only except for the System Date and Time setting.

Group	Setup Item	Access / Options	Description
BIOS Information	BIOS Vendor	Display only	American Megatrends
	Core Version	Display only	Current AMI BIOS core version in use
	Compliancy	Display only	UEFI Spec revision that the BIOS complies to
	Project Version	Display only	Advantech BIOS Version info
	Build Date & Time	Display only	Shows BIOS build date and time
System Language		Display only	Selects the Setup Menu Language. Only English is supported on the SKY-8201L.
System Date		MM/DD/YY	Displays and sets the system date as used by the BIOS
System Time		HH:MM:SS	Displays and sets the system time as used by the BIOS
Access Level		Display Only	Shows the user privilege level according to the security settings. If password protection has not been enabled, this will default to **"Administrator"**.

3.2.1.1 Setting System Time and Date

Use this option to change the system time and date. Highlight System Time or System Date using the <Arrow> keys. Enter new values through the keyboard. Press the <Tab> key or the <Arrow> keys to move between fields. The date must be entered in MM/DD/YY format. The time is entered in HH:MM:SS format.

Note!
Please note that system time and date are set during manufacturing process according to factory's local time zone. You may need to update system time to reflect the desired time zone when you receive the unit.

3.2.2 Platform Setup Menu

Users can select any of the items in the left frame of the screen, such as the Trusted Computing Configuration, to go to the sub menu for that item. Users can display an Advanced BIOS Setup option by highlighting it using the <Arrow> keys.

The Advanced BIOS Setup screen is shown below. The sub menus are described on the following pages.

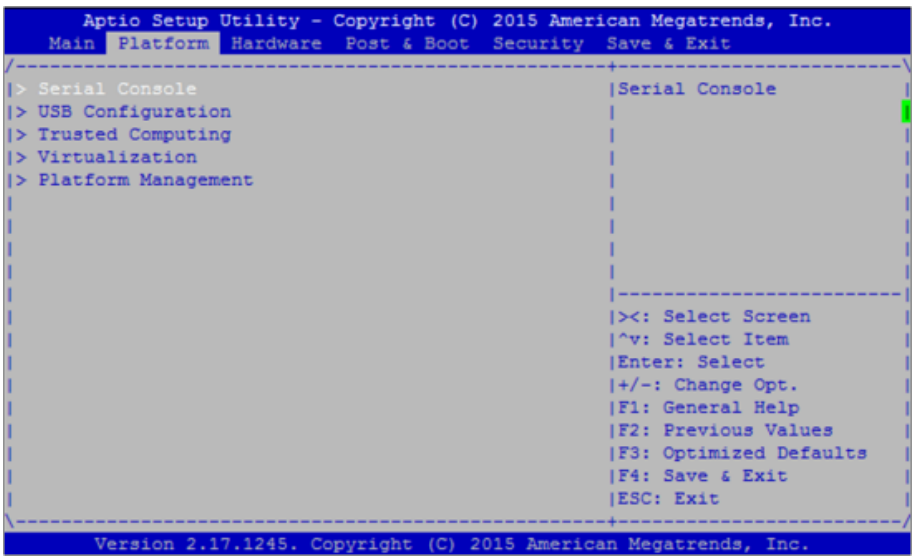

Figure 3-4: Platform Setup: Main Screen

3.2.2.1 Serial Console

The settings for console can be accessed in this menu.
This sub menu allows you to change the settings used for the serial console. For example, users can define the terminal type, bits per second, data bits, parity, stop bits and others.

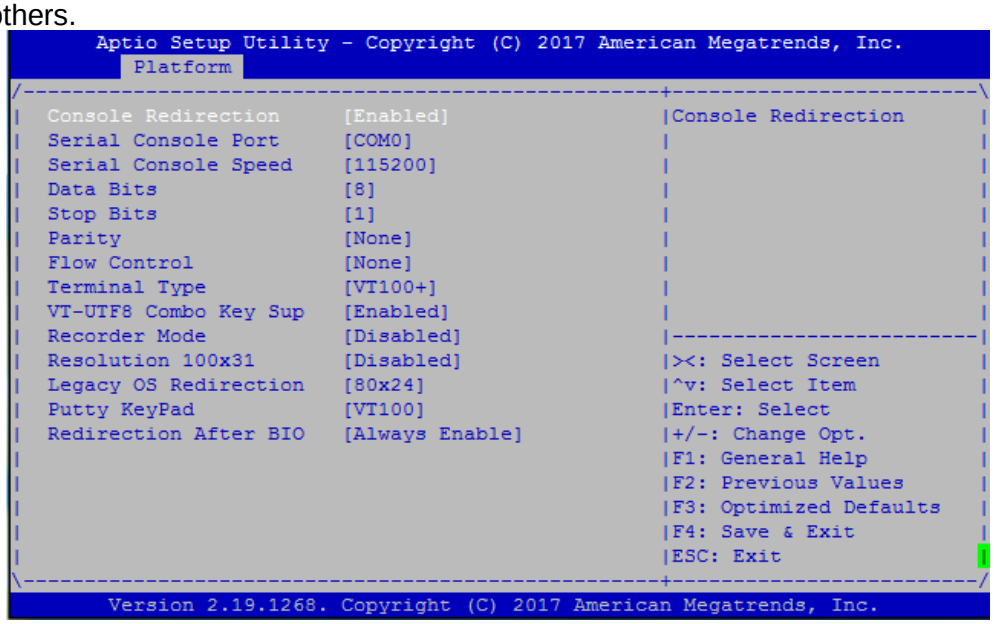

Figure 3-5: Platform Setup: Serial Console Menu

Table 3-2: Serial Console Menu

Group	Setup Item	Access / Options	Description
None	Console Redirection	Enabled Disabled	Enable or disable console redirection.
	Serial Console Port	COM0	Configure serial port for console redirection.
	Bits Per Second	9600, 19200, 38400, 57600, 115200	Configure serial port Baud rate for serial port.
	Data Bits	7 8	Configure the number of data bits in each transmitted or received serial character for both serial ports.
	Stop Bits	1 2	Configure the number of stop bits transmitted and received in each serial character for both serial ports.
	Parity	None Even Odd Mark Space	Configure if parity bit is generated (transmit data) or checked (receive data) between the last data word bit and stop bit of the serial data for both serial ports.
	Flow Control	None Hardware RTS/CTS	Configure flow control for console redirection.
	Terminal Type	VT100 VT100+ VT-UTF8 ANSI	Configure the type of console emulation used.
	VT-UTF8 Combo Key Support	Disabled Enabled	Enable or disable VT-UTF8 Combo Key
	Recorder Mode	Disabled Enabled	Enable or disable Recorder Mode
	Resolution 100x31	Disabled Enabled	Enable or disable extended terminal resolution
	Legacy OS Redirection Resolution	80x24 80x25	Select Legacy OS Redirection Resolution
	Putty KeyPad	VT100 LINUX XTERMR6 SCO	Select FunctionKey and KeyPad on Putty.

		ESCN VT400	
	Redirection After BIOS POST	Always Enable BootLoader	The Settings specify if BootLoader is selected, then Legacy console redirection is disabled before booting to Legacy OS. Default value is always Enabled which means Legacy Console Redirection is enabled for Legacy OS.

3.2.2.2 USB Configuration

This sub menu allows you to change the settings used for USB and to get an overview of the USB devices detected by the BIOS.

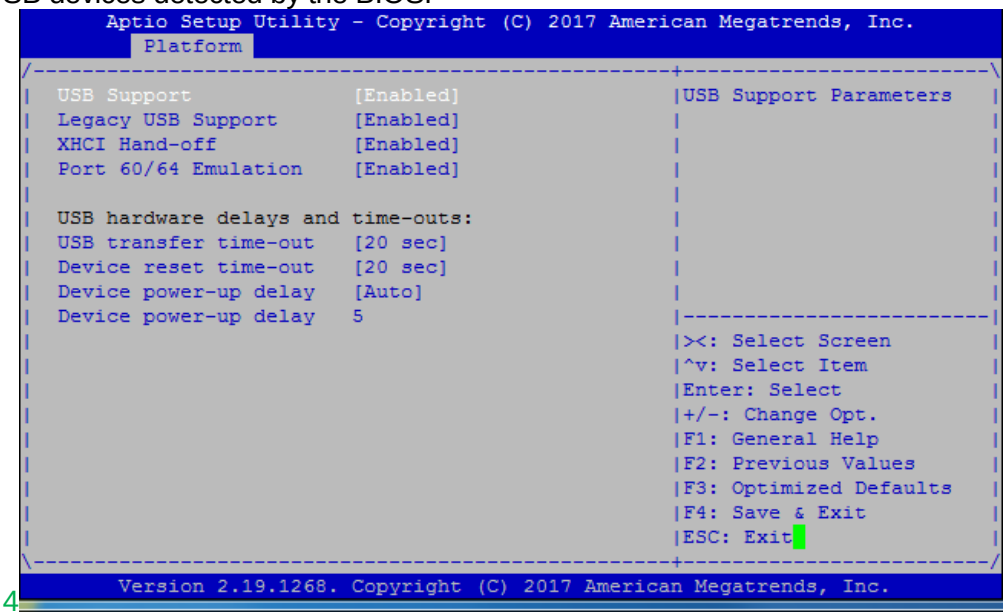

Figure 3-6: Platform Setup: USB Configuration Menu

Table 3-3: USB Configuration Menu

Group	Setup Item	Access / Options	Description
None	USB Support	Disabled Enabled	Enable or disable USB function support
	Legacy USB Support	Enabled Disabled Auto	Enable or disable Legacy USB support. AUTO option disables legacy support if no USB devices are connected. DISABLE option will keep USB devices available only for EFI applications.
	XHCI Hand-off	Disabled Enabled	If the OS doesn't support EHCI, BIOS will get the control.

	Port 60/64 Emulation	Disabled Enabled	Enables I/O port 60h/64h emulation support.
	USB transfer time-out	1 sec 5 sec 10 sec 20 sec	Set the time-out value for USB transfers.
	Device reset time-out	10 sec 20 sec 30 sec 40 sec	Set the time-out value for USB mass storage device Start Unit command.
	Device power-up delay	Auto Manual	Select device power-up delay control way.
	Device power-up delay in seconds	5	Set device power-up delay when “Device power-up delay” choose “Manual”

3.2.2.3 Trusted Computing (if TPM1.2 present)

When system with TPM1.2 module installed, and the BIOS will auto detect it and the related setting will be shown in the BIOS setup menu as below.

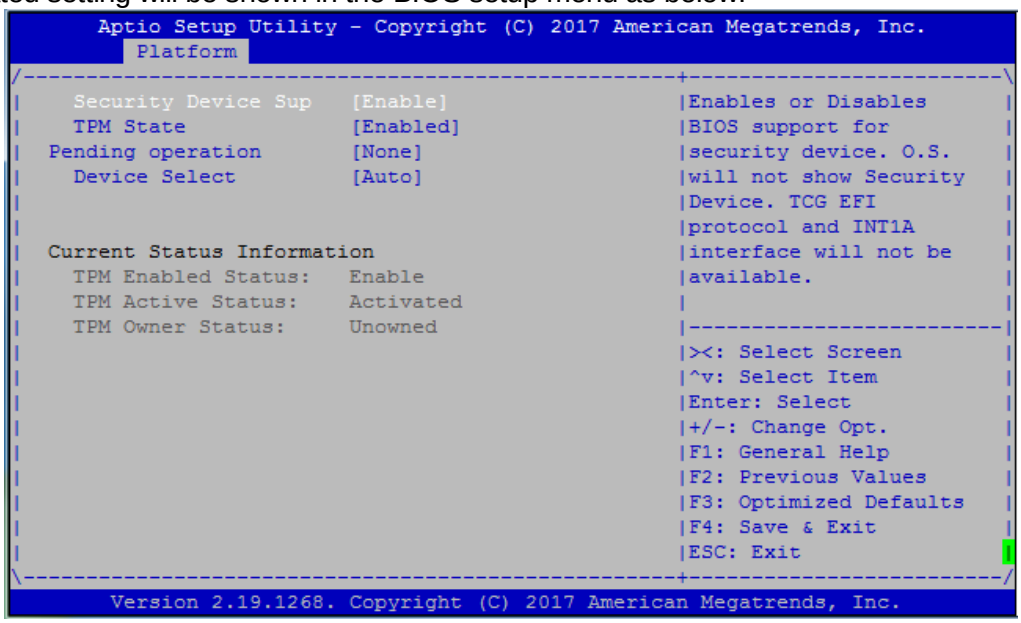

Figure 3-7: Platform Setup: Trusted Computing(TPM1.2)

Table 3-4: Trusted Computing Menu (TPM1.2)

Group	Setup Item	Access / Options	Description
None	Security Device Support	Enabled Disabled	Enables or disables the support for the TPM.

	TPM State	Enabled Disabled	Enable or disable Security Device. NOTE: Your Computer will reboot during restart in order to change State of the Device.
	Pending TPM Operation	None TPM Clear	Choose TPM operation for next boot.
	Device Select	TPM1.2 TPM2.0 Auto	TPM 1.2 will restrict support to TPM 1.2 devices, TPM 2.0 will restrict support to TPM 2.0 devices, Auto will support both with the default set to TPM 2.0 devices if not found, TPM 1.2 devices will be enumerated
Current Status Information	TPM Status	Display Only	Shows TPM Enablement Status
	TPM Active Status	Display Only	Shows TPM Activation Status
	TPM Owner	Display Only	Shows Current TPM Owner

3.2.2.4 Trusted Computing (if TPM2.0 present)

When system with TPM2.0 module installed, and the BIOS will auto detect it and the related setting will be shown in the BIOS setup menu as below.

Figure 3-8: Platform Setup: Trusted Computing(TPM2.0)

Table 3-5: Trusted Computing Menu (TPM2.0)

Group	Setup Item	Access / Options	Description
None	Vendor	Display Only	Display TPM vendor

	Firmware Version	Display Only	Display TPM firmware version
	Security Device Support	Enabled Disabled	Enables or disables the support for the TPM.
	Active PCR banks	SHA-1 SHA256	N/A
	Available PCR banks	SHA-1 SHA256	N/A
	SHA-1 PCR Bank	Disabled Enabled	Enable SHA-1 PCR Bank.
	SHA256 PCR Bank	Disabled Enabled	Enable SHA256 PCR Bank.
	Pending operation	None TPM Clear	Choose TPM operation for next boot.
	Platform Hierarchy	Disabled Enabled	Enable or Disable Platform Hierarchy.
	Storage Hierarchy	Disabled Enabled	Enable or Disable Storage Hierarchy.
	Endorsement Hierarchy	Disabled Enabled	Enable or Disable Endorsement Hierarchy.
	TPM2.0 UEFI Spec Version	TCG_1_2 TCG_2	Select the TCG2 Spec Version Support.
	Physical Presence Spec Version	1.2 1.3	Select to tell O.S. to support PPI Spec Version 1.2 or 1.3.
	TPM 20 InterfaceType	CRB TIS	Show the Communication Interface to TPM 20 Device.
	Device Select	TPM 1.2 TPM 2.0 Auto	Auto will support both with the default set to TPM 2.0 devices. If not found, TPM 1.2 devices will be enumerated
	TPM 2.0 HID	MSFT0101 PNP0C31	Choose TPM 2.0 HID return value.

3.2.2.5 Virtualization

This sub menu allows you to change the settings used for Virtualization function.

Intel® Virtualization Technology for Directed I/O (VT-d). Thus, BIOS handle virtual functions exposed by PCIe devices in case SR-IOV is supported, otherwise PCIe devices will be assigned to virtual machines in pass-through mode. This applies for all PCIe devices.

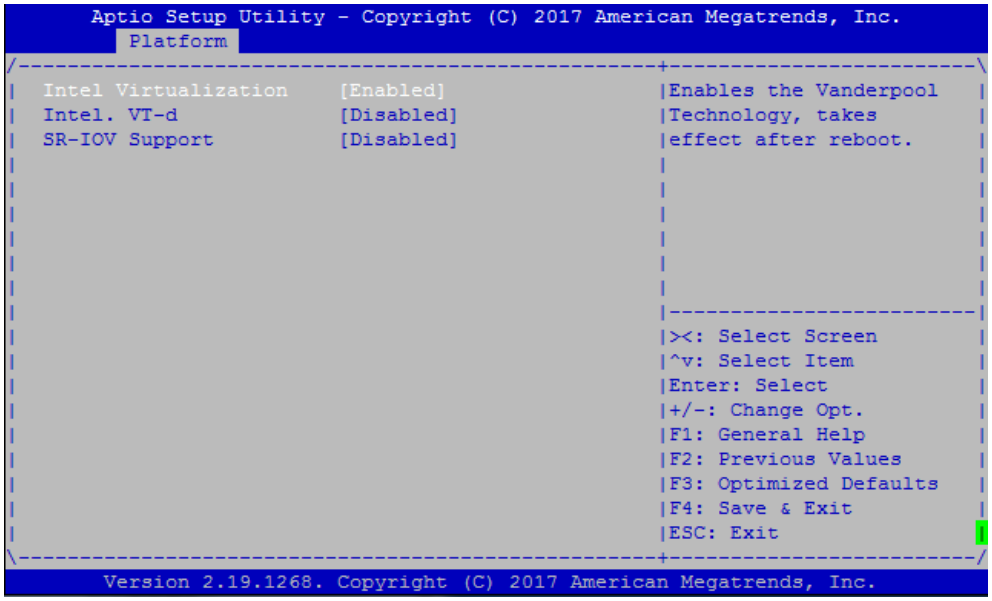

Figure 3-9: Platform Setup: Virtualization

Table 3-6: Virtualization

Group	Setup Item	Access / Options	Description
None	Intel Virtualization Technology	Enabled Disabled	Enable or disable BIOS support for the Vanderpool Technology
	Intel(R) VT-d	Enabled Disabled	Enable or disable Intel Virtualization Technology for Directed I/O (VT-d) by reporting the I/O device assignment to VMM through DMAR ACPI Tables.
	SR-IOV Support	Enabled Disabled	It allows a device to separate access to its resources among various PCIe hardware functions.

3.2.2.6 Platform Management

This sub menu allows you to change the settings used for related CPU utilization setting. The default configuration for CPU was optimized setting for getting better performance for networking, so it is not recommend to change it.

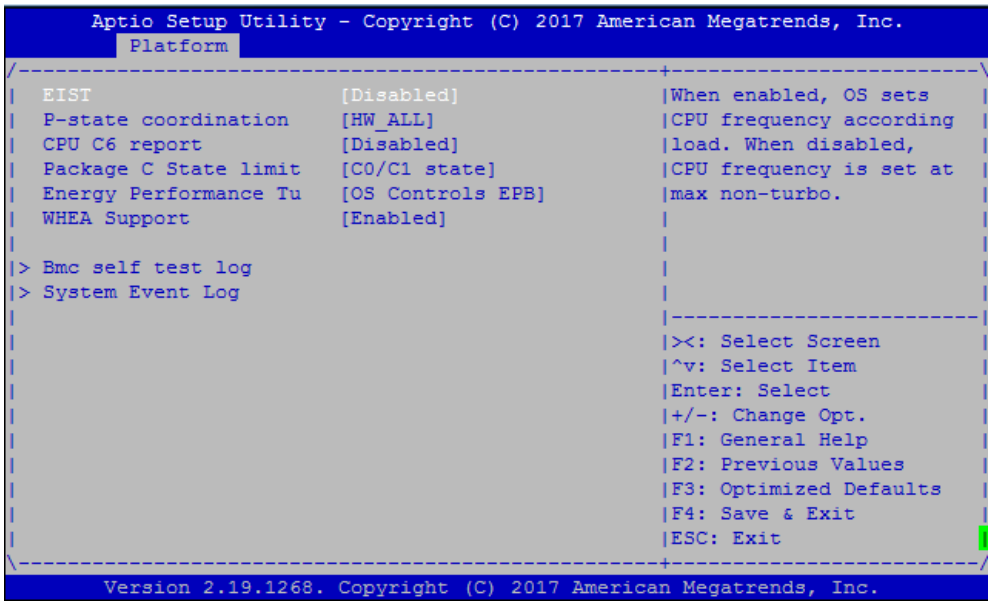

Figure 3-10: Platform Setup: Platform Management

Table 3-7: Platform Management

Group	Setup Item	Access / Options	Description
None	EIST	Enable Disable	Enable or disable BIOS support for Enhanced Intel SpeedStep Technology, When enabled, OS sets CPU frequency according load. When disabled, CPU frequency is set at max non-turbo.
	P-state coordination	HW_ALL	HW_ALL (hardware) coordination is recommended over SW_ALL and SW_ANY (software coordination).
	CPU C6 report	Enable Disable	Enable/Disable CPU C6(ACPI C2) report to OS Recommended to be enabled.
	Package C State limit	C0/C1 state C2 state C6(non Retention) state C6(Retention) state	Package C State limit. The "waking-up time" will be longer if Package C state limit setting is deep C state support.
	Energy Performance	OS Controls EPB BIOS Controls	Selects whether BIOS or Operating System chooses energy performance bias

	Tuning	EPB	tuning.
	WHEA Support	Enable Disable	Enable or disable the WHEA support
BMC Self test log	Erase Log	NO Yes, On every reset	Erase Log Options
	When log is full	Clear Log Do not log any more	Select the action to be taken when log is full
System event log	SEL Components	Enable Disable	Change this to enable or disable all features of System Event Logging during boot.
	Erase SEL	No Yes, On next reset Yes, ON every reset	Choose options for erasing SEL.
	When SEL is Full	Do Nothing Erase Immediately	Choose options for reactions to a full SEL.
	Log EFI Status Codes	Disable Both Error code Progress code	Disable the logging of EFI Status Codes or log only error code or only progress code or both

3.2.3 Hardware Setup

This sub menu allows you to change the settings of the Intel chipset. Please note that "chipset" is a legacy term and the related functionality is split over the CPU and PCH portions of the SoC. Similarly, the terms "South Bridge" and "North Bridge" are legacy terms and do not represent the silicon implementation any more. However, those terms are kept consistent with previous products to allow users to navigate more easily.

The sub menus are described on the following pages.

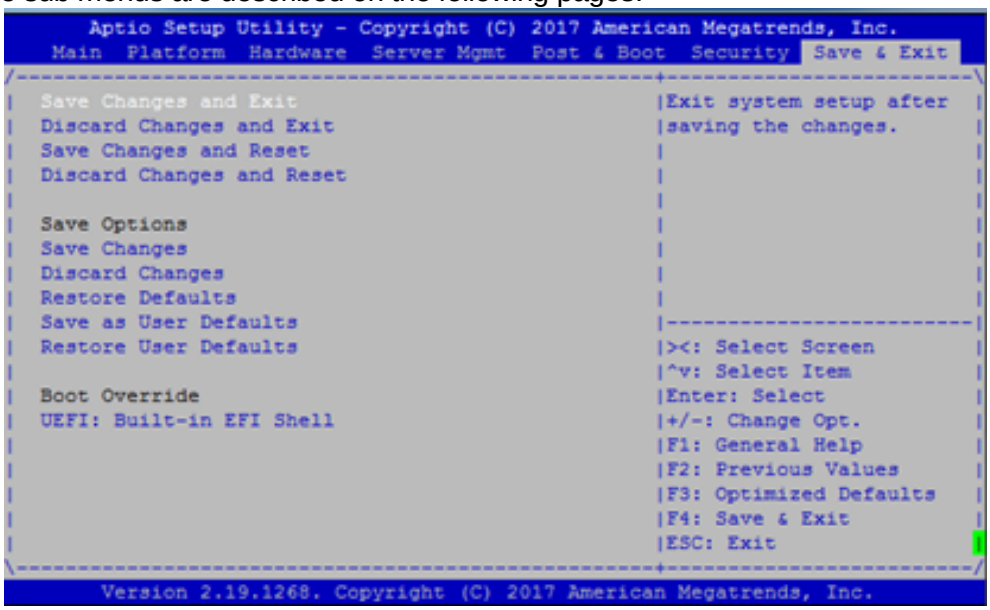

Figure 3-11: Hardware Setup

3.2.3.1 CPU Configuration

This menu supports configuration of the Xeon CPU.

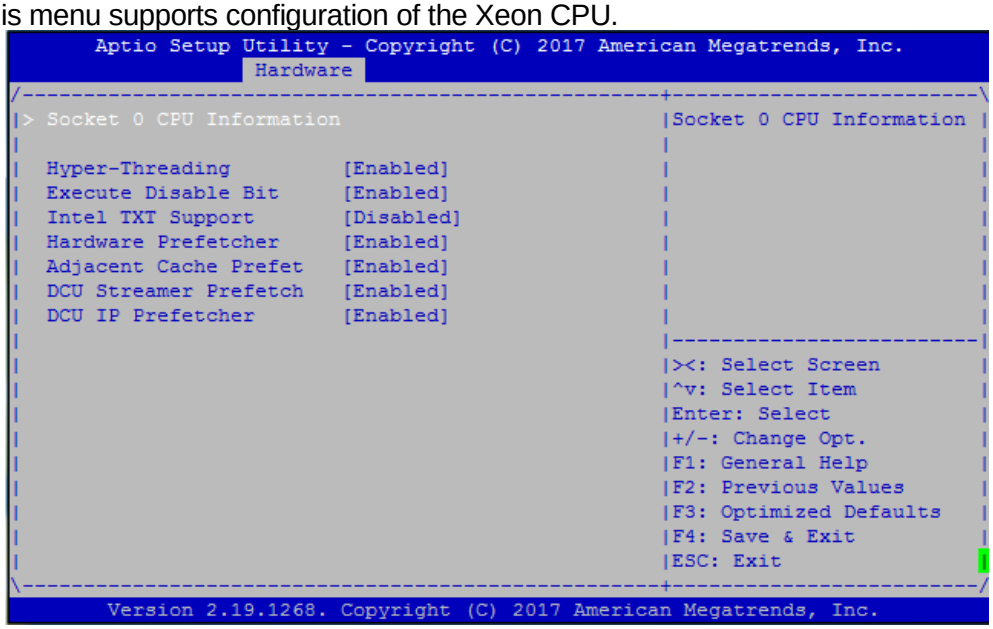

Figure 3-12: Hardware Setup: CPU Configuration

Table 3-8: CPU Configuration

Group	Setup Item	Access / Options	Description
Socket 0/1 CPU information	CPU signature	Display only	Displays information on the processor installed
	Microcode Patch		
	CPU Frequency		
	Processor Cores		
	Intel VT-x Technology		
	L1 code Cache		
	L2 Cache		
	L3 Cache		
None	Hyper-threading	Enable Disable	Enables Hyper Threading (Software Method to enable/disable logical processor threads.
	Execute Disable Bit	Enable Disable	Execute Disable Bit allows the processor to classify areas in memory where application code can be executed and cannot

			preventing certain classes of malicious buffer overflow attacks when combined with a supporting operating system.
	Intel TXT Support	Enable Disable	Enable/Disable Intel® TXT
	Hardware Prefetcher	Enable Disable	Enable or disable Hardware Prefetcher feature. = MLC Streamer Prefetcher (MSR 1A4h Bit[0])
	Adjacent Cache Line Prefetch	Enable Disable	Enable or disable Adjacent Cache Prefetch feature. = MLC Spatial Prefetcher (MSR 1A4h Bit[1])
	DCU Streamer Prefetch	Enable Disable	Enable or disable DCU Streamer Prefetcher feature. DCU streamer prefetcher is an L1 data cache prefetcher (MSR 1A4h [2]).
	DCU IP Prefetcher	Enable Disable	Enable or disable DCU IP Prefetcher feature. DCU IP prefetcher is an L1 data cache prefetcher (MSR 1A4h [3]).

3.2.3.2 Northbridge

This menu allows the configuration of the memory controller and related features of the SoC.

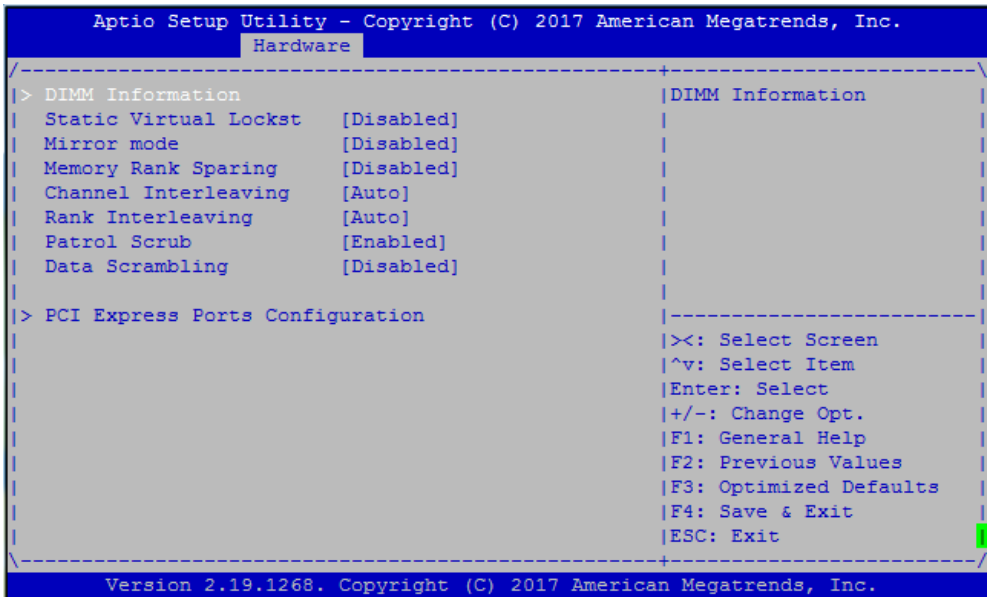

Figure 3-13: Hardware Setup: Northbridge

Table 3-9: Northbridge

Group	Setup Item	Access / Options	Description
None	DIMM Information	N/A	Select sub-menu.
	Static Virtual Lockstep Mode	Enable Disable	Static Virtual Lockstep Mode enable/disable
	Mirror mode	Disable Mirror Mode 1LM	Mirror mode will set entire 1LM memory in system to be mirrored,
	Memory Rank Sparing	Enable Disable	Memory Rank Sparing enable/disable
	Numa	Enable Disable	Enable or Disable Non uniform Memory Access (NUMA)
	IMC Interleaving	Auto 1-way Interleave 2-way Interleave	Select IMC Interleaving settings
	Channel Interleaving	Auto 1-way Interleave 2-way Interleave 3-way Interleave	Select Channel Interleaving setting
	Rank Interleaving	Auto 1-way Interleave 2-way Interleave 4-way Interleave 8-way Interleave	Select Rank Interleaving setting
	Patrol Scrub	Enable Disable	Select to enable / disable Patrol Scrub Support
	Data Scrambling	Auto Enable Disable	Select to auto to enable the Scrambler
	PCI Express Ports Configuration	N/A	Select sub-menu.

3.2.3.3 Southbridge

This menu contains settings for the South Bridge for related SATA and USB and ACPI setting etc.

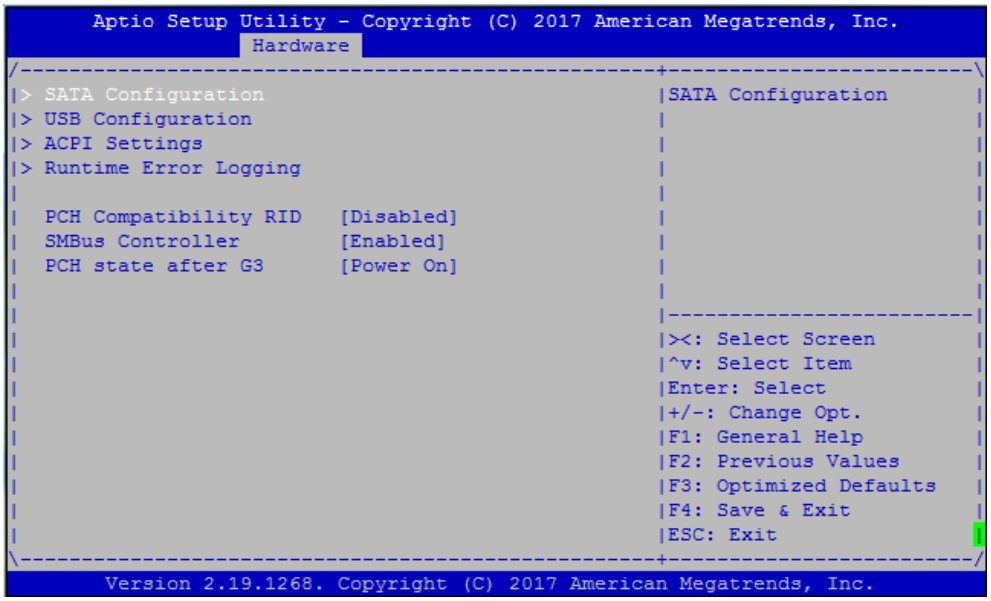

Figure 3-14: Hardware Setup: Southbridge

Table 3-11: Southbridge

Group	Setup Item	Access / Options	Description
None	SATA Configuration	N/A	Select sub-menu.
	USB Configuration	N/A	Select sub-menu.
	ACPI Settings	N/A	Select sub-menu.
	Runtime Error Logging	N/A	Select sub-menu.
	PCH Compatibility RID	Enable Disable	Enable or Disable PCH's CCRID
	SMBus Controller	Enable Disable	Enable or Disable SMBus CDevice
	PCH state after G3	Power on	Select S0/S5 for ACPI state after a G3

3.2.3.4 NVMe Configuration

This menu contains settings for NVMe controller and Drive information

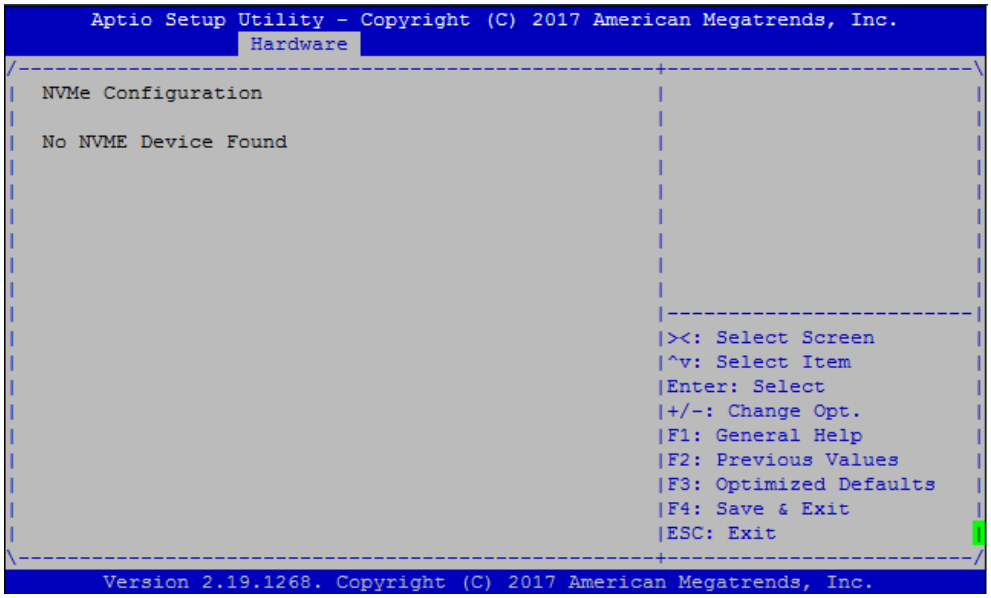

Figure 3-15: Hardware Setup: NVMe Configuration

3.2.3.5 Intel Virtual RAID on CPU

This menu contains settings for Intel® VMD for Volume Management Device Configuration

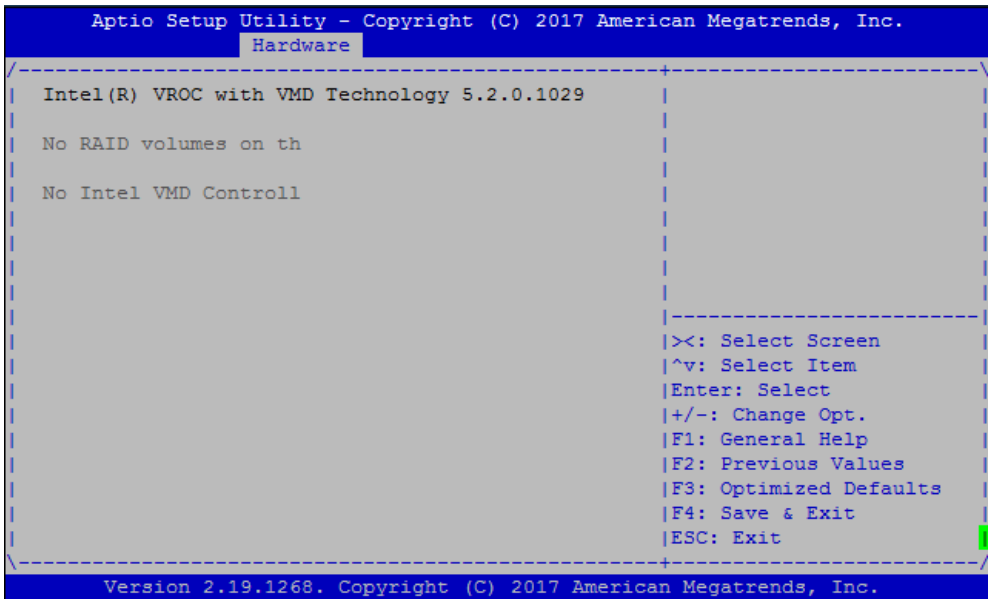

Figure 3-16: Hardware Setup: Intel VROC

3.2.4 Server Management Setup

The Server Mgmt menu supports configuring BMC related features such as OS Watchdog Timer, etc.

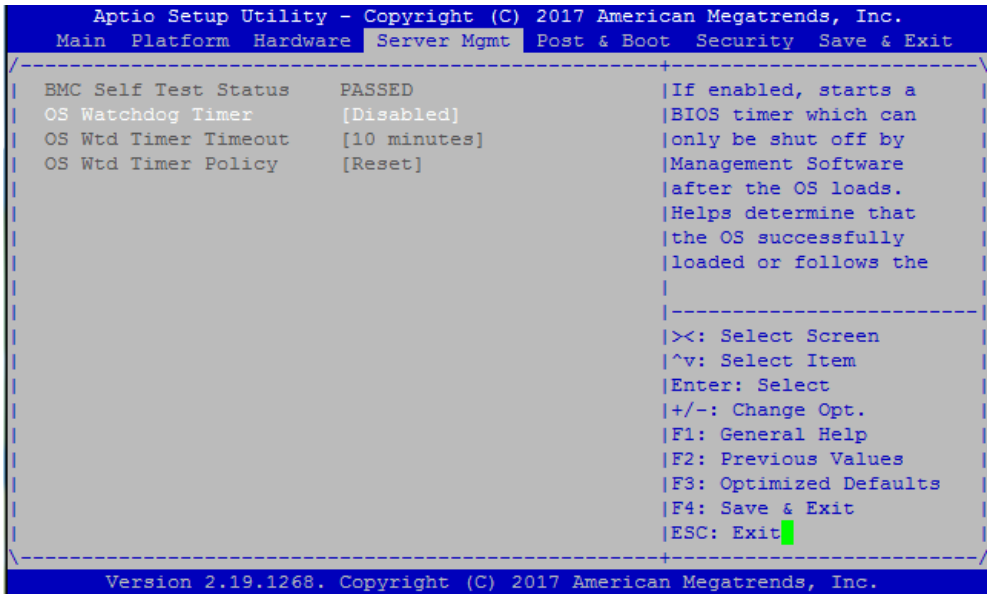

Figure 3-17: Server Management Setup

Table 3-16: Server Management Setup

Group	Setup Item	Access / Options	Description
None	BMC Self Test Status	Display only (Passed)	BMC self test status indication during power on process
	OS Watchdog Timer	Enable Disable	If enabled, starts a BIOS timer which can only be shut off by Management Software after the OS loads. Helps determine that the OS successfully loaded or follows the OS Boot Watchdog Timer
	OS Wtd Timer Timeout	5 minutes 10 minutes 15 minutes 20 minutes	Configure the length of the OS Boot Watchdog Timer. Not available if OS Boot Watchdog Timer is disabled.
	OS Wtd Timer Policy	Do Nothing Reset Power Down	Configure how the system should respond if the OS Boot Watchdog Timer expires. Not available if OS Boot Watchdog Timer is disabled.

3.2.5 Security Setup

"**Administrator Password**" allows users to configure the system so that a password after being installed is required each time the system boots, and/or an attempt is made to enter the Setup program.

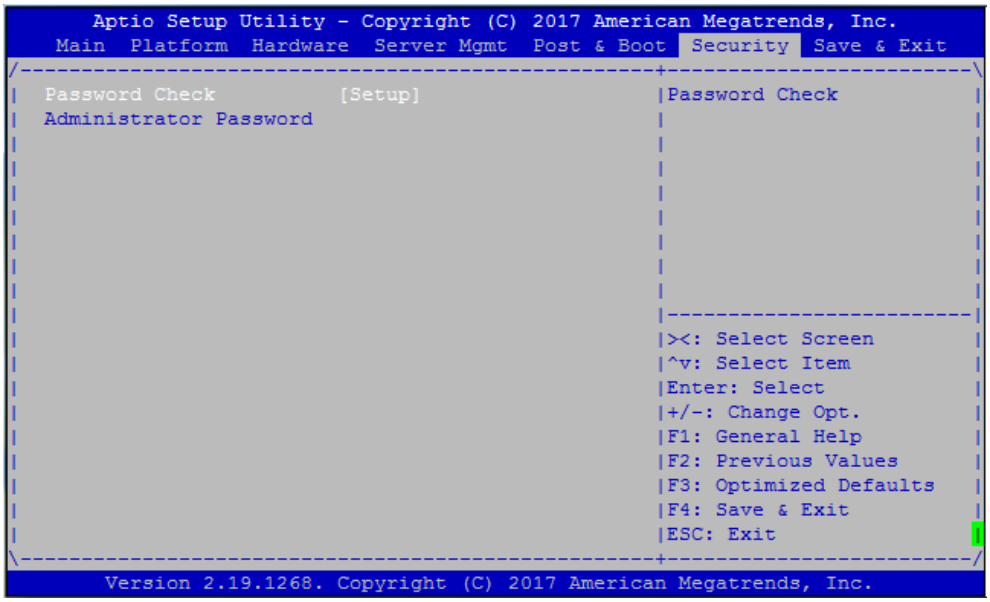

Figure 3-18: Security Menu

Note!

1. *If set the "Password Check" is [Setup], then this only limits access to Setup and is only asked for when entering Setup.*
2. *If set the "Password Check" is [Always], then this is a power on password and must be entered to boot or enter Setup. In Setup the User will have Administrator rights.*
3. *The password length must be in the following range:*
   Minimum length: 3
   Maximum length: 20

3.2.6 Post & Boot Menu

Users can configure the system boot priority settings via the boot page. The default setting of boot priority of boot option #1 is “UEFI: Built-in EFI Shell”; Users can define the boot priorities based on the application.

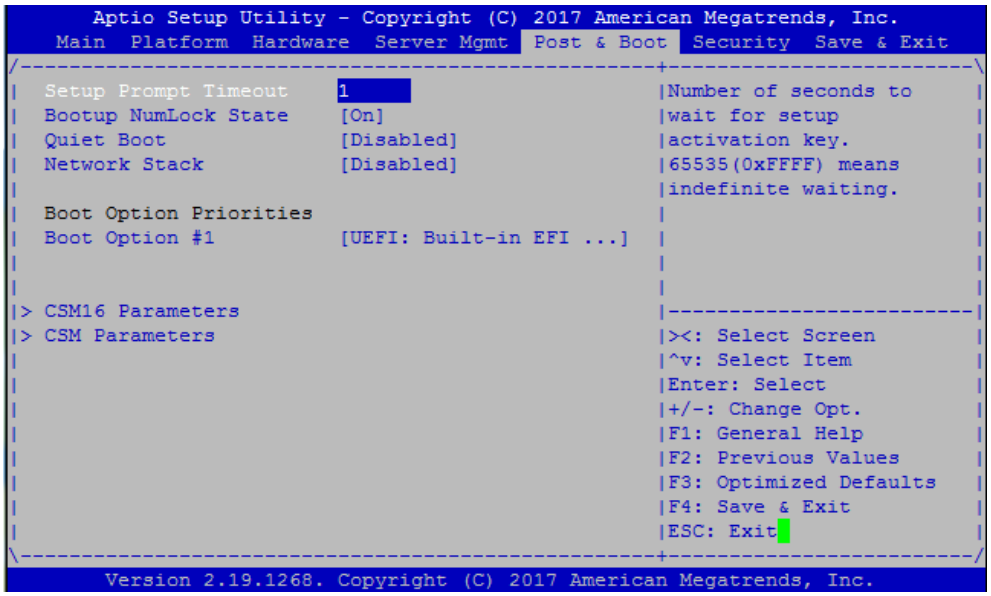

Figure 3-19: Post & Boot Menu

Table 3-17: Post & Boot Menu

Group	Setup Item	Access / Options	Description
None	Setup Prompt Timeout	1	Number of seconds to wait for setup activation key.
	Bootup NumLock State	On	Select the keyboard NumLock state.
	Quiet Boot	Disabled	Enables or disables Quiet Boot option.
	Network Stack	Disabled	Enables or disables boot via Network (PXE)
	Boot Option Priority	User Defined	Sets the system boot order.
	CSM16 Parameters	Option ROM Messages	Force BIOS Keep Current
	CSM Parameters	CSM Support	Enable the CSM support

3.2.6.1 CSM16 Configuration

This submenu allows users to configure the support for legacy BIOS CSM16

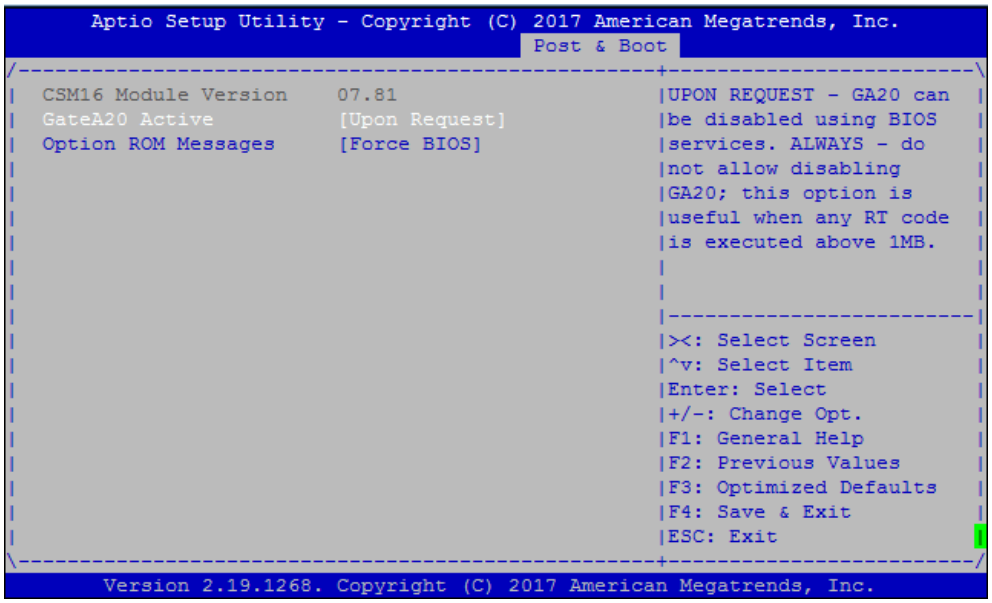

Figure 3-20: Post & Boot Menu: CSM16 Configuration

Table 3-18: CSM16 Configuration

Group	Setup Item	Access / Options	Description
None	GateA20 Active	Upon Request Always	UPON REQUEST - GA20 can be disabled using BIOS services. ALWAYS - do not allow disabling GA20; this option is useful when any RT code is executed above 1MB
	Option ROM Messages	Force BIOS Keep Current	Set display mode for Option ROM

3.2.6.2 Compatibility Support Module (CSM) Configuration

This submenu allows users to configure the support for legacy BIOS mechanisms and option ROMs.

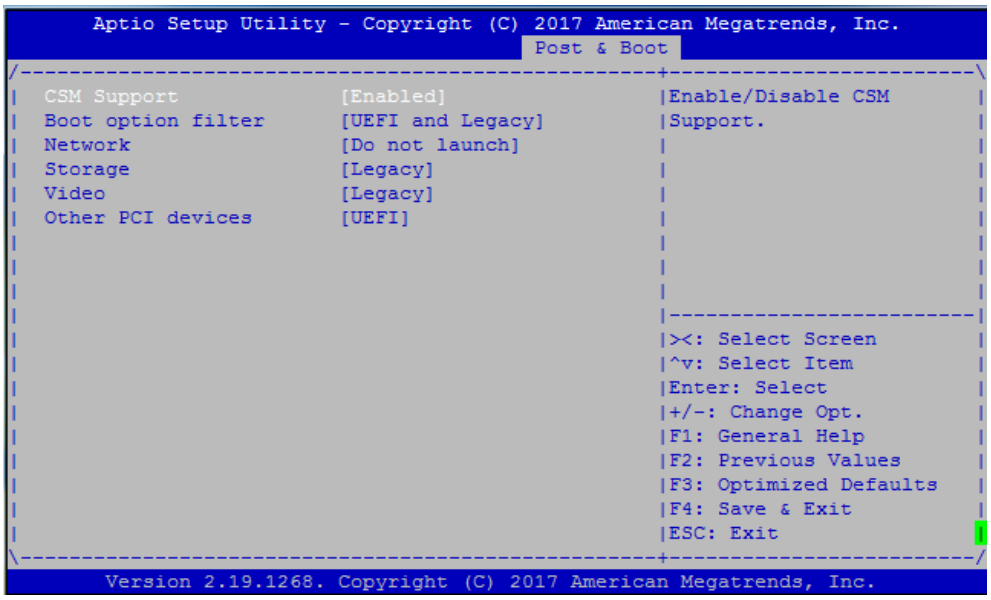

Figure 3-21: Post & Boot Menu: CSM Configuration

Table 3-19: CSM Configuration

Group	Setup Item	Access / Options	Description
None	CSM Support	Enabled Disabled	Enables or disables the Compatibility Support Module.
	Boot option filter	UEFI and Legacy Legacy Only UEFI Only	This item allows to control the execution of legacy and UEFI compliant Option ROMs
	Network	Do not launch UEFI Legacy	This item allows a more granular control of OptionROM execution depending of the type of extension device.
	Storage		
	Video		
	Other PCI device ROM		

3.2.7 Save & Exit Menu

The SKY-8201 BIOS allows users to store BIOS configuration results as **"User Defaults."** Users can select **"Save as User Defaults"** to record all changes which had been made in previous pages as the default setting for further use.

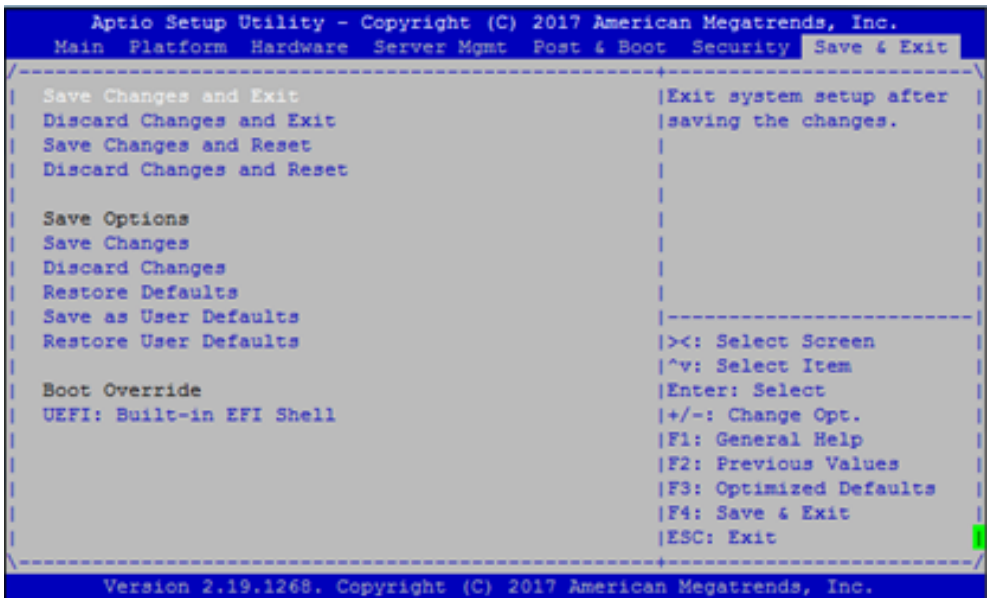

Figure 3-22: Save & Exit Menu

Table 3-20: Save & Exit Menu Options

Group	Setup Item	Description
None	Save Changes and Exit	Exit setup after saving the changes. Does not update User defaults.
	Discard Changes and Exit	Exit setup without saving any changes.
	Save Changes and Reset	Reset system after saving the changes. Does not update User Defaults.
	Discard Changes and Reset	Reset system without saving the changes.
Save Options	Save Changes	Save Changes made so far to any of the setup options.
	Discard Changes	Discard Changes made so far to any of the

		setup options.
	Restore Defaults	Restores the BIOS factory defaults to all the setup options.
	Save as User Defaults	Saves the Current BIOS Settings as User Defaults.

Group	Setup Item	Description
Save Options	Restore User Defaults	Restores the User defaults to all the setup options.
Boot Override	UEFI: < boot device>	This option allows you to override the specified boot order and use a different boot device for the next boot.

3.3 Installing Components

Caution!
Please make sure you follow the safety guidelines presented in section 1.1 when making changes to the hardware.

Except for installing 2.5" disk drives, all component installation described in this section require power to the unit to be shut down and removed.

3.3.1 Removing the Top Cover

Note!
You need:
- *A PH2 screw driver*

The top cover is secured by 5 thumb screws. To remove the top cover, loosen the thumb screws. When unlocked, a spring inside the thumb screw will notably push the screw head towards you.

After that, slide the top cover backwards until the front flange of the top cover disengages with the unit's face plate, and then lift off and remove the top cover.

Figure 3-23: Slide Top Cover Back

Caution!
Please power off the system before removing the top cover.

CAUTION: TO DISCONNECT POWER, REMOVE ALL POWER CORDS FROM UNITS.
ATTENTION: DÉBRANCHER TOUS LES CORDONS D'ALIMENTATION POUR DÉCONNECTER L'UNITÉ DU SECTEUR.
警告: 電源を切るには、ユニットから電源コードをすべてつとも抜いてください。
当心: 如要切断电源, 请将所有电源线都从机器上拔掉。
注意: 若要切斷電源, 請將所有電源線都從機器上拔除。

3.3.2 Reinstalling the Top Cover

Note!
You need:
- *A PH2 screw driver*

To re-install the top cover slide it onto the unit from the top with the top cover flange facing the unit's face plate. Keep a gap of about an inch between the front plate and the flange. After that, slide the top cover forward until the flange is fully seated underneath the face plate. Now tighten the thumb screws.

3.3.3 PCIe Card Installation

Note!
You need:
- *A PH2 screw driver*
- *PCIe cards are to be installed*

After removing the top cover, follow the instructions below:

1. If any PCIe cards are already installed before, please remove all IO cables and / or extra power cables.
2. Loosen the seven cage securing screws that secure the PCIe card cage. Make sure they are fully unscrewed.
3. Grab the card cage and and pull the card cage evenly and straight to the top. You should feel a small "bump" when the riser card disengages with the motherboard. Keep pulling the card cage to the top until it is fully removed from the chassis and put it on the desk with the riser card connector facing towards you.
4. Remove the blank plate(s) on the slot(s) you want to install a card / cards in using a PH2 screw driver.
5. Remove the card holder at the rear side of the card cage. Make sure to retain the screws.
6. Insert the card(s) to be installed. Make sure the card(s) align with the IO opening as well as the PCIe connector during installation. When installed, secure the card's face plate using the screw left over from removing the blank panel.
7. If the PCIe cards need extra power supplies, connect the power cables to the PCIe cards
8. Re-install the card holder.
9. Turn around the card cage assembly and re-insert it into the SKY-8201 system. Make sure the card cage is fully seated before you fasten the securing screws that hold the card cage in place.
10. Install the top cover.
11. Reconnect primary power and power on the unit.
12. Enter the BIOS setup menu, launch the EFI shell and use the PCIe device display command to validate that the newly installed board(s) has/have been properly recognized.
13. Leave the BIOS and boot the OS.

Remove the PCIe Cage

1) Loosen 7 cage securing screws
2) Make sure they are fully unscrewed
3) Pull the cage with hand as shown below

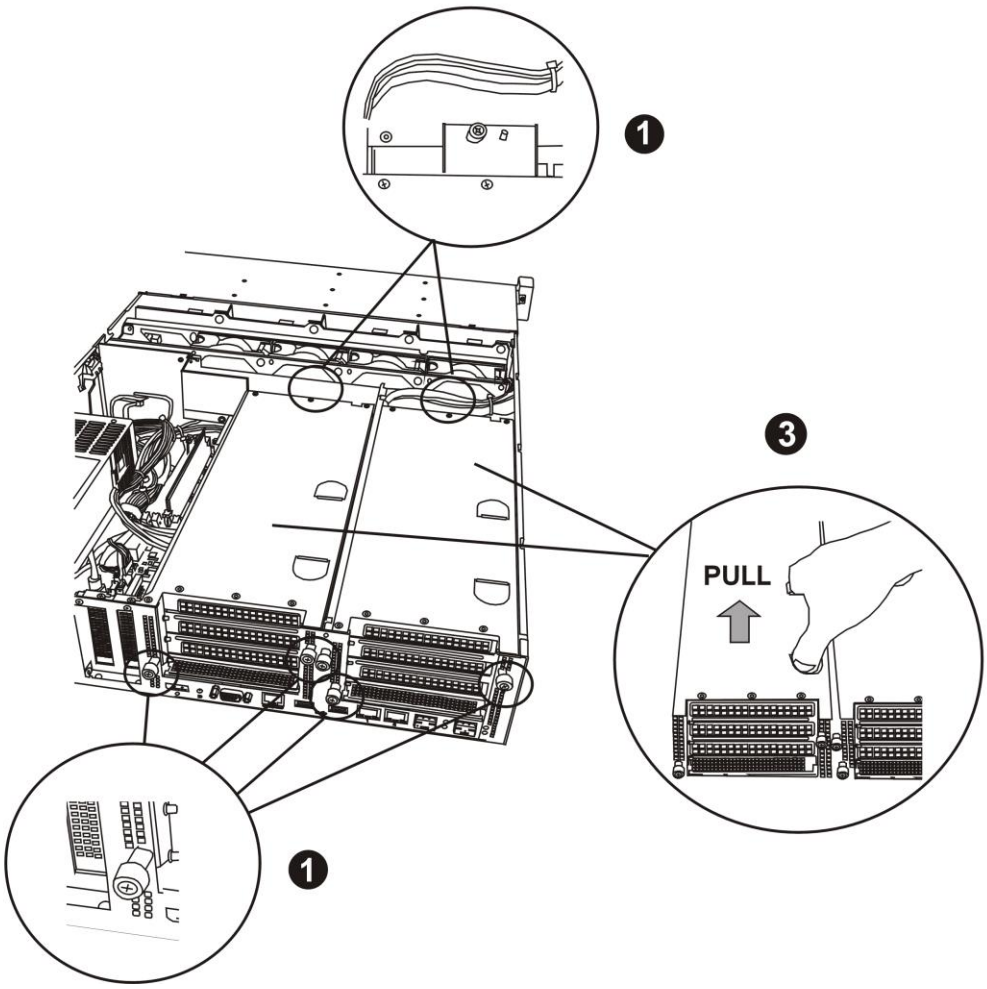

Figure 3-24: PCIe Card Cage Assembly

3.3.4 Disk Installation

3.3.4.1 2.5" HDD/SSD Drives

Note!
You need:
- *A PH2 screw driver*
- *A standard 2.5" HDD/SSD*

1. Locate the disk tray you want to install the disk.
2. Unlock the tray by moving the lock to the bottom.

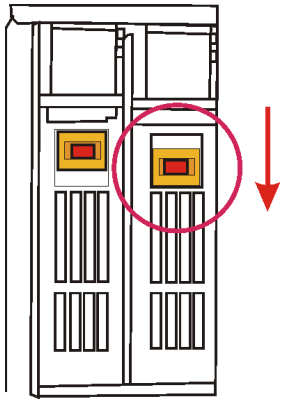

Figure 3-25: Unlocking the Disk Tray

3. Push the tray's button to open the tray handle.

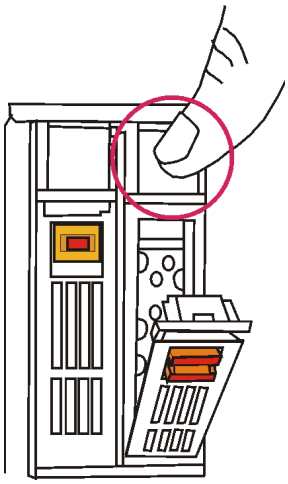

Figure 3-26: Opening the Disk Tray

4. Grab the tray handle and pull it evenly towards you.

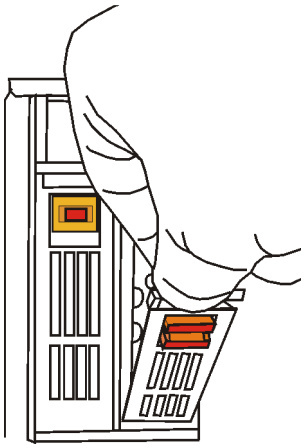

Figure 3-27: Removing the Disk Tray

5. Install the 2.5” drive using four screws contained in the disk screw kit as shown below. Be careful when inserting the drive to not damage the disk light pipes at the bottom of the tray. Keep the screws loosely inserted into the threads until all four screws have been inserted. Then tighten the screws one after the other.

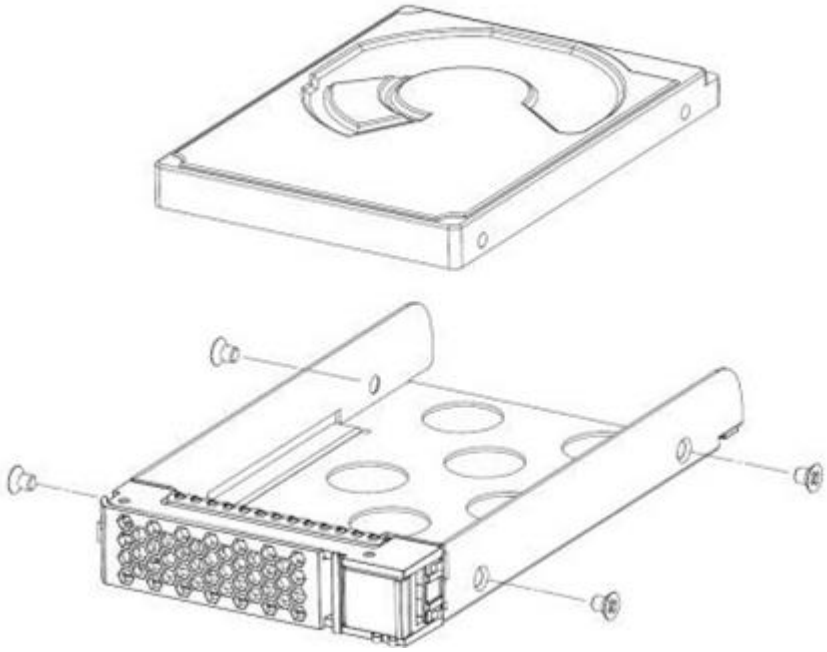

Figure 3-28: Mounting the Drive in the Disk Tray

6. Insert the tray into the disk bay until the drive engages with the connector on the SAS backplane. Now close the handle and lock the tray by pushing the lock DT1 to the top.

3.3.4.2 3.5” HDD/SSD Drives

Note!
You need:
- *A PH2 screw driver*
- *A standard 3.5” HDD/SSD*

1. Locate the disk tray you want to install the disk.
2. Move the lock DT1 to the right to open the tray handle.

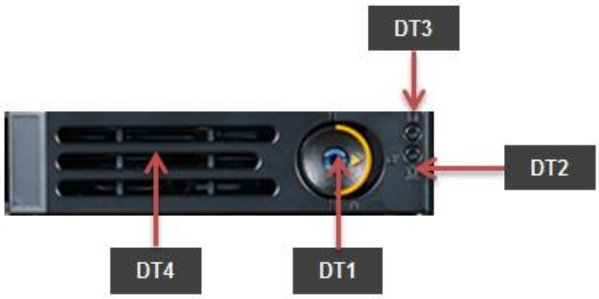

3. After tray handle is opened, grab the tray handle and pull it evenly towards you.

4. Install the 3.5” drive using four screws contained in the disk screw kit as 2.5” drive. Be careful when inserting the drive to not damage the disk light pipes at the bottom of the tray. Keep the screws loosely inserted into the threads until all four screws have been inserted. Then tighten the screws one after the other.

5. Insert the tray into the disk bay until the drive engages with the connector on the SAS backplane. Now close the handle and the tray will be automatically locked.

3.3.4.3 M.2 SSD

Note!
You need:
- *A PH1 screw driver*
- *A standard M.2 SSD*
- *1 M.2 mounting screws (included in the unit)*

1. Remove the left PCIe card cage CG2 as described in *section 3.3.5*.
2. Make sure the M.2 disk is compliant with the socket and that the mechanical keys match.
3. Insert the m-SATA SSD with an angle of approximate 33° in the slot. Press the m-SATA SSD downwards.
4. Install and fasten the fixing screw.

1. Reinstall the PCIe card cage and top cover.

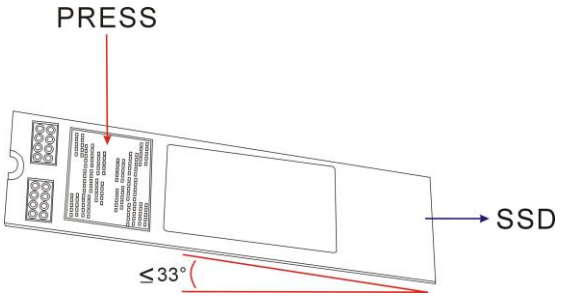

Figure 3-29: M.2 SSD Installation

3.3.5 Memory Installation

After removing the top cover, the PCIe card cages and the stiffener plate follow the instructions below for DIMM installation:

2. Double check that the DIMMs is be installed match the requirements of *section 2.4.6* and make sure you follow the DIMM population rules given in that section.
3. Open the white latches on the left and right sides of the DIMMs by turning it outwards as indicated by the arrows below.

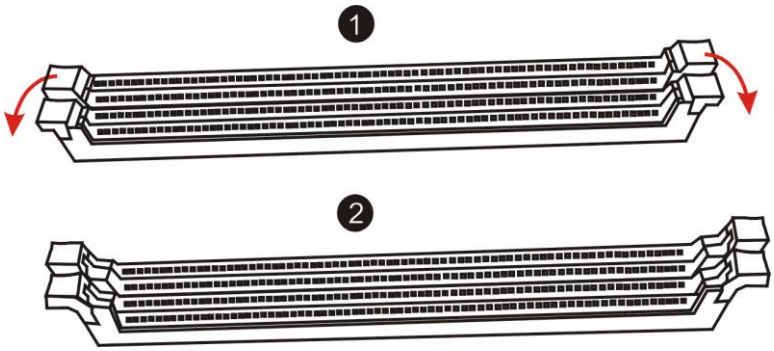

Figure 3-30: Opening DIMM Latches

4. Select DIMM orientation so that the keys in the DIMM module and socket match.

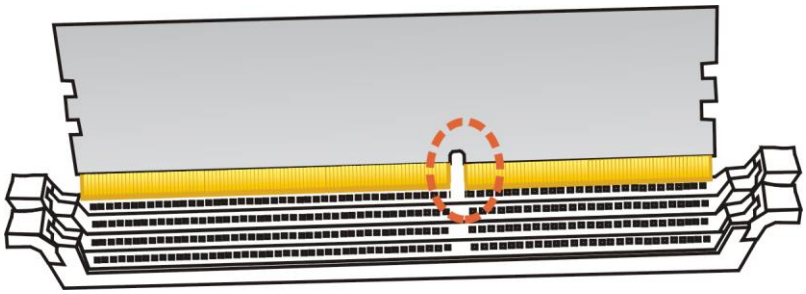

Figure 3-31: DIMM Key Alignment

5. Insert the DIMM from the top using the guide rails on the left and right of the DIMM sockets.

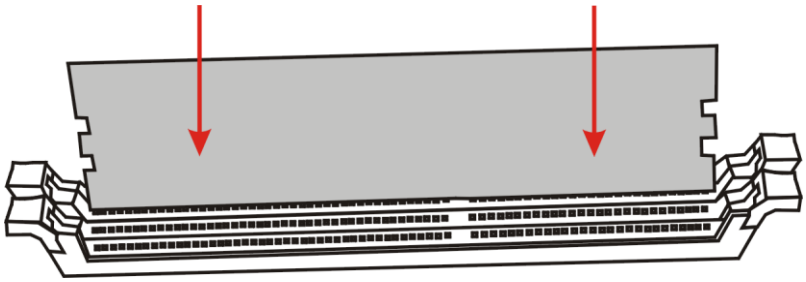

Figure 3-32: DIMM Insertion into Slide Rails

6. Put your thumbs near the right and left end of the DIMM and press down the DIMM evenly until the white latches fully close with a click.

Figure 3-33: Seating the DIMM in the Socket

7. In case you want to install another DIMM, repeat steps 1 to 5 accordingly.

3.3.6 CPU Installation

The SKY-8201L normally ships as a pre-configured system with CPUs and memory installed. Installing CPUs requires trained personal, special tools and a full production environment.

In the unlikely case that you need to install CPUs by yourself, please contact your Advantech representative as product warranty may be impacted.

For a basic overview on the CPU installation procedure, tools and challenges, please refer to intel's document #516860, section **"System Integration and ESD"**.

3.4 Firmware Upgrades

Advanced Platform Management allows users to update the SKY-8201L's firmware via the BMC's system or LAN interfaces using the HPM.1 protocol and related definitions.

Firmware components supported include the BMC firmware itself as well as the system BIOS. For improved reliability most updateable components support a backup image stored in a dedicated, redundant flash chip. The BMC will perform an automatic rollback in case of an upgrade failure to recover the unit to its previous well known state.

Note!
Please note that BMC functionality of BMC will be degraded while uploading BMC firmware. Some functionality including sensor listing, BMC information etc, will not be available at that time.

- Component 0: BMC boot loader
- Component 1: BMC application firmware
- Component 2: System BIOS

Caution!
Please note that the BMC boot loader is a hardened and minimized firmware component which is not subject to field updates as it does not support fail safe updates via rollback capabilities. The upgrade capability of the boot loader is only intended for factory use. A failing update in the field may leave the unit dysfunctional and may result in the requirement for on premise service access and / or RMA.

Ipmitool version xyz or later support HPM.1 firmware updates. This tool is part of all major Linux distributions.

3.5 Replacing FRUs

Caution!
Please make sure you follow the safety guidelines presented in section1.1 when making changes to the hardware.

Unless otherwise noted in the sections below, removing the power to the unit / putting the unit out of service is not required.

For instruction on how to remove and install the top cover of the unit please refer to *section 3.3*.

3.5.1 PSU Modules

Note!
You need:
- *no special tools*
- *A spare PSU module*

To replace a PSU module, proceed as follows:

1. Locate the PSU module to be replaced (failing / degraded).
2. Remove the power cord from the PSU power connector PS3
3. Grab the PSU handle PS2 and unlock the PSU module by pulling the PSU lock PS4 to the left.
4. Hold the lock and extract the PSU module towards you.
5. Insert a new PSU module into the bay. Make sure the module is fully seated.The lock will flip to the right automatically when the module is seated.
6. Connect the power cord.
7. The PSU module should start operation and the PSU Status LED PS5 should turn green.
8. You may want to check the PSU status via Advanced Platform Management and also clean the System Event Log.

3.5.2 Disk Drives

3.5.2.1 2.5" HDD

Note!
You need:
- *A PH2 screw driver*
- *A standard 2.5" HDD/SSD*

To remove the HDD, proceed in the reverse of the installation procedure in *Section 3.3.4.1*.

1. Open the front cover.
2. Unlock the tray by moving the lock DT1 to the left. Push the tray's black button DT4 to open the tray handle.
3. Grab the tray handle and pull it evenly towards you.
4. Remove the 2.5" drive mounting screws.
5. Install a new HDD by following the instructions in *Section 3.3.4.1*.

3.5.2.2 M.2 SSD

Note!
You need:
- *A PH1 screw driver*
- *A standard M.2 SSD*
- *Power down the unit*

To remove a M.2 SSD proceed in the reverse of the installation procedure in *section 3.3.4.3*:

1. Remove the top cover and PCIe card cage
2. Locate the M.2 SSD to be replaced
3. Remove the M.2 mounting screws. Please be sure to hold the last screw as the spring mechanism in the M.2 connector will flip the M.2 module upwards once the screw is lose.
4. Extract the M.2 module

Install a new SSD following the mounting instructions of the same section.

3.5.3 DIMMs

Note!
You need:
- *No special tools*
- *Power down the unit*

As a preparation you need to remove the top cover, PCIe card cages and the stiffener plate as described earlier.

To replace a DIMM module, basically extract the DIMM module by pushing the DIMM socket latches outward. As the latches flip completely open, the DIMM module will be automatically extracted from the socket. Pull the DIMM module out vertically.

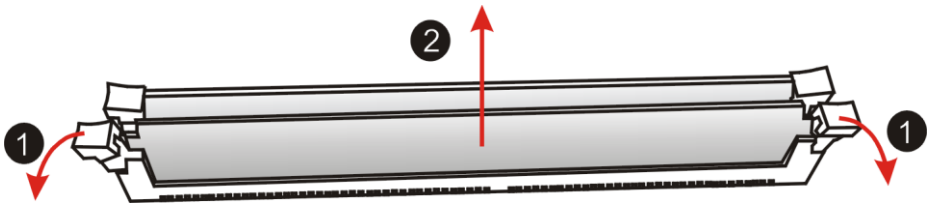

Figure 3-34: Unlocking and Removing a DIMM

To insert a new DIMM, please follow the process described in *Section 3.3.9*.

Chapter 4

Tips, Tricks and Troubleshooting

Appendix A

Connector Pinout and LED Information

A.1 Console Port

SKY-8201 uses RJ45 connector for the console port at rear I/O panel.

Figure A-1: RJ45 Console Connector

Table A-1: Console Connector Pin Assignment

Pin No.	Signal Name	Description
1	RTS	Request To Send (Output from SKY-8200)
2	DTR	Data Terminal Ready (Output from SKY-8200)
3	TX	Transmitted Data (Output from SKY-8200)
4	GND	Digital Circuit Ground
5	GND	Digital Circuit Ground
6	RX	Received Data (Input to SKY-8200)
7	DSR	Data Set Ready (Input to SKY-8200)
8	CTS	Clear To Send (Input to SKY-8200)

A.2 USB 3.0 Type A Connectors

SKY-8201 provides two USB 3.0 connector at real I/O panel. These connectors can be found at rear panel.

Figure A-2: USB Type A Connector

Table A-2: USB 3.0 Type A Connector Pin Assignment or Pin Assignment

Pin No.	Signal Name	Description
1	Power	■ USB Power (5V, 900mA, Fused)
2	D-	USB 2.0 Differential Pair Signals
3	D+	
4	GND	Digital Circuit Ground
5	SSRX-	USB3.0 SuperSpeed Receiver Differential Pair Signals
6	SSRX+	
7	GND_DRAIN	Digital Circuit Ground for Signal Return
8	SSTX-	USB3.0 SuperSpeed Transmitter Differential Pair Signal
9	SSTX+	

A.3 DisplayPort Connector

DisplayPort connector is used to output digital video signals.This connector can be found at rear panel.

Figure A-3: DisplayPort Connector

Table A-3: DisplayPort Connector Pin Assignment

Pin No.	Signal Name	Description
1	ML_Lane 0(p)	Main Link Singnal [0] P
2	GND	Ground
3	ML_Lane 0 (n)	Main Link Singnal [0] N
4	ML_Lane 1 (p)	Main Link Singnal [1] P
5	GND	Ground
6	ML_Lane 1 (n)	Main Link Singnal [1] N
7	ML_Lane 2 (p)	Main Link Singnal [2] P
8	GND	Ground
9	ML_Lane 2 (n)	Main Link Singnal [2] N
10	ML_Lane 3 (p)	Main Link Singnal [3] P
11	GND	Ground
12	ML_Lane 3 (n)	Main Link Singnal [3] N
13	CONFIG1	Configuration Signal 1
14	CONFIG2	Configuration Signal 2
15	AUX CH (p)	Aux Channel Signal P
16	GND	Ground
17	AUX CH (n)	Aux Channel Signal N
18	Hot Plug Detect	Source Detection
19	Return	Power Return Signal (GND) for Box-to-Box DisplayPort connecter

20	DP_PWR	Power for Box-to-Box DisplayPort connecter

A.4 10 GbE SFP+ Connector (SFF-8431)

SKY-8201 provides two 10 GbE SFP+ ports, these connectors can be found at rear panel.

Figure A-4: SFP+ Connector

Table A-4: SFP+ Connector Pin Assignment

Pin No.	Signal Name	Description
1	VeeT	Module Transmitter Ground
2	Tx_Fault	Module Transmitter Fault
3	Tx_Disable	Transmitter Disable; Turns off transmitter laser output
4	SDA	2-wire Serial Interface Data Line
5	SCL	2-wire Serial Interface Clock
6	Mod_ABS	Module Absent
7	RS0	Rate Select 0, optionally controls SFP+ module receiver.
8	Rx_LOS	Receiver Loss of Signal Indication
9	RS1	Rate Select 1, optionally controls SFP+ module transmitter
10	VeeR	Module Receiver Ground
11	VeeR	Module Receiver Ground
12	RD-	Receiver Inverted Data Output
13	RD+	Receiver Non-Inverted Data Output
14	VeeR	Module Receiver Ground
15	VccR	Module Receiver 3.3 V Supply
16	VccT	Module Transmitter 3.3 V Supply
17	VeeT	Module Transmitter Ground
18	TD+	Transmitter Non-Inverted Data Input
19	TD-	Transmitter Inverted Data Input

20	VeeT	Module Transmitter Ground

Pin No.	Signal Name	Description	Pin No.	Signal Name	Description
C6	GND	Circuit Ground	D6	GND	Circuit Ground
C7	TX3_P	Transmit Pair #3	D7	TX2_P	Transmit Pair #2
C8	TX3_N		D8	TX2_N	
C9	GND	Circuit Ground	D9	GND	Circuit Ground

Table A-5: SFP+ Connector LED Indication

Speed LED	Left (Green/Amber Color)	Link/Active LED	Right (Green Color)
1 Gbps	Static Amber	Link	Turn on
10 Gbps	Static Green	Active	Blinking

A.5 RJ45 10/100/1000BASE-T Ports

SKY-8201 has two 10/100/1000BASE-T RJ45 ports, these connectors can be found at rear panel.

Figure A-5: RJ45 10/100/1000Base-T Connector

A.5.1 Connector Pinout

Table A-6: RJ45 10/100/1000Base-T Connector Pin Assignment

Pin No.	Signal Name	Description
1	MDI[0]+	■ Media Dependent Interface [0]+
2	MDI[0]-	■ Media Dependent Interface [0]-
3	MDI[1]+	■ Media Dependent Interface [1]+
4	MDI[2]+	■ Media Dependent Interface [2]+
5	MDI[2]-	■ Media Dependent Interface [2]-
6	MDI[1]-	■ Media Dependent Interface [1]-
7	MDI[3]+	■ Media Dependent Interface [3]+
8	MDI[3]-	■ Media Dependent Interface [3]-

A.5.2 LED Definition

Table A-7: RJ45 Connector LED Indication

Speed LED	Left (Green/Amber Color)	Link/Active LED	Right (Green Color)
10 Mbps	Off	Link	Turn on
100 Mbps	Static Amber	Active	Blinking
1000 Mbps	Static Green		

Appendix B

BIOS POST Code

POST Codes are diagnostic codes sent by the BIOS to IO address 0x80. A POST adapter needs to be installed in the system to view these POST Codes. Codes not listed are reserved by AMI.

Table B-1: BIOS POST Codes

POST Code	Description
0x01	Power on. Reset type detection (soft/hard)
0x02	AP initialization before microcode loading
0x03	North Bridge initialization before microcode loading
0x04	South Bridge initialization before microcode loading
0x05	Unused
0x06	Microcode loading
0x07	AP initialization after microcode loading
0x08	North Bridge initialization after microcode loading
0x09	South Bridge initialization after microcode loading
0x0A	Unused
0x0B	Cache initialization
0x0E	Microcode not found
0x0F	Microcode not loaded
0x10	PEI Core is started
0x11	Pre-memory CPU initialization is started
0x12	Pre-memory CPU initialization (CPU module specific)
0x13	Pre-memory CPU initialization (CPU module specific)
0x14	Pre-memory CPU initialization (CPU module specific)
0x15	Pre-memory North Bridge initialization is started
0x16	Pre-Memory North Bridge initialization (North Bridge module specific)
0x17	Pre-Memory North Bridge initialization (North Bridge module specific)
0x18	Pre-Memory North Bridge initialization (North Bridge module specific)

POST Code	Description
0x19	Pre-memory South Bridge initialization is started
0x1A	Pre-memory South Bridge initialization (South Bridge module specific)
0x1B	Pre-memory South Bridge initialization (South Bridge module specific)
0x1C	Pre-memory South Bridge initialization (South Bridge module specific)
0x1D – 0x2A	Unused
0x2B	Memory initialization. Serial Presence Detect (SPD) data reading
0x2C	Memory initialization. Memory presence detection
0x2D	Memory initialization. Programming memory timing information
0x2E	Memory initialization. Configuring memory
0x2F	Memory initialization (other).
0x30	Reserved for ASL
0x31	Memory Installed
0x32	CPU post-memory initialization is started
0x33	CPU post-memory initialization. Cache initialization
0x34	CPU post-memory initialization. Application Processor(s) (AP) initialization
0x35	CPU post-memory initialization. Boot Strap Processor (BSP) selection
0x36	CPU post-memory initialization. System Management Mode (SMM) initialization
0x37	Post-Memory North Bridge initialization is started
0x38	Post-Memory North Bridge initialization (North Bridge module specific)
0x39	Post-Memory North Bridge initialization (North Bridge module specific)
0x3A	Post-Memory North Bridge initialization (North Bridge module specific)
0x3B	Post-Memory South Bridge initialization is started

POST Code	Description
0x3C	Post-Memory South Bridge initialization (South Bridge module specific)
0x3D	Post-Memory South Bridge initialization (South Bridge module specific)
0x3E	Post-Memory South Bridge initialization (South Bridge module specific)
0x3F -0x4E	Unused
0x4F	DXE IPL is started
0x50	Memory initialization error. Invalid memory type or incompatible memory speed
0x51	Memory initialization error. SPD reading has failed
0x52	Memory initialization error. Invalid memory size or memory modules do not match.
0x53	Memory initialization error. No usable memory detected
0x54	Unspecified memory initialization error.
0x55	Memory not installed
0x56	Invalid CPU type or Speed
0x57	CPU mismatch
0x58	CPU self test failed or possible CPU cache error
0x59	CPU micro-code is not found or micro-code update is failed
0x5A	Internal CPU error
0x5B	Reset PPI is not available
0x60	DXE Core is started
0x61	NVRAM initialization
0x62	Installation of the South Bridge Runtime Services
0x63	CPU DXE initialization is started
0x64	CPU DXE initialization (CPU module specific)
0x65	CPU DXE initialization (CPU module specific)
0x66	CPU DXE initialization (CPU module specific)

POST Code	Description
0x67	CPU DXE initialization (CPU module specific)
0x68	PCI host bridge initialization
0x69	North Bridge DXE initialization is started
0x6A	North Bridge DXE SMM initialization is started
0x6B	North Bridge DXE initialization (North Bridge module specific)
0x6C	North Bridge DXE initialization (North Bridge module specific)
0x6D	North Bridge DXE initialization (North Bridge module specific)
0x6E	North Bridge DXE initialization (North Bridge module specific)
0x6F	North Bridge DXE initialization (North Bridge module specific)
0x70	South Bridge DXE initialization is started
0x71	South Bridge DXE SMM initialization is started
0x72	South Bridge devices initialization
0x72	South Bridge DXE Initialization (South Bridge module specific)
0x73	South Bridge DXE Initialization (South Bridge module specific)
0x74	South Bridge DXE Initialization (South Bridge module specific)
0x75	South Bridge DXE Initialization (South Bridge module specific)
0x76	South Bridge DXE Initialization (South Bridge module specific)
0x77	South Bridge DXE Initialization (South Bridge module specific)
0x78	ACPI module initialization
0x79	CSM initialization
0x80 – 0x8F	Unused
0x90	Boot Device Selection (BDS) phase is started
0x91	Driver connecting is started
0x92	PCI Bus initialization is started
0x93	PCI Bus Hot Plug Controller Initialization
0x94	PCI Bus Enumeration

POST Code	Description
0x95	PCI Bus Request Resources
0x96	PCI Bus Assign Resources
0x97	Console Output devices connect
0x98	Console input devices connect
0x99	Super IO Initialization
0x9A	USB initialization is started
0x9B	USB Reset
0x9C	USB Detect
0x9D	USB Enable
0xA0	IDE initialization is started
0xA1	IDE Reset
0xA2	IDE Detect
0xA3	IDE Enable
0xA4	SCSI initialization is started
0xA5	SCSI Reset
0xA6	SCSI Detect
0xA7	SCSI Enable
0xA8	Setup Verifying Password
0xA9	Start of Setup
0xAA	Reserved for ASL
0xAB	Setup Input Wait
0xAC	Reserved for ASL
0xAD	Ready To Boot event
0xAE	Legacy Boot event
0xAF	Exit Boot Services event
0xB0	Runtime Set Virtual Address MAP Begin

POST Code	Description
0xB1	Runtime Set Virtual Address MAP End
0XB2	Legacy Option ROM Initialization
0xB3	System Reset
0XB4	USB hot plug
0xB5	PCI bus hot plug
0xB6	Clean-up of NVRAM
0xB7	Configuration Reset (reset of NVRAM settings)
0xC0 – 0xCF	Unused
0xD0	CPU initialization error
0xD1	North Bridge initialization error
0xD2	South Bridge initialization error
0xD3	Some of the Architectural Protocols are not available
0xD4	PCI resource allocation error. Out of Resources
0xD5	No Space for Legacy Option ROM
0xD6	No Console Output Devices are found
0xD7	No Console Input Devices are found
0xD8	Invalid password
0xD9	Error loading Boot Option (LoadImage returned error)
0xDA	Boot Option is failed (StartImage returned error)
0xDB	Flash update is failed
0xDC	Reset protocol is not available
0xE0	S3 Resume is stared (S3 Resume PPI is called by the DXE IPL)
0xE1	S3 Boot Script execution
0xE2	Video repost
0xE3	OS S3 wake vector call
0xE8	S3 Resume Failed

POST Code	Description
0xE9	S3 Resume PPI not Found
0xEA	S3 Resume Boot Script Error
0xEB	S3 OS Wake Error
0xF0 – 0xF4	Unused
0xf8 – 0xFA	Unused

Appendix D

Declaration of Conformity

The SKY-8201 has been successfully tested for compliance to the regulations below. Should you need a signed copy of the declaration of conformity or the related test reports, please contact your Advantech representative.

CE

This product has passed the CE test for environmental specifications when shielded cables are used for external wiring.

FCC Class A

Note: This equipment has been tested and found to comply with the limits for a Class A digital device, pursuant to part 15 of the FCC Rules. These limits are designed to provide reasonable protection against harmful interference when the equipment is operated in a commercial environment. This equipment generates, uses, and can radiate radio frequency energy and, if not installed and used in accordance with the instruction manual, may cause harmful interference to radio communications. Operation of this equipment in a residential area is likely to cause harmful interference in which case the user will be required to correct the interference at his or her own expense.

Appendix E

Warranty and RMA

Advantech warrants to you, the original purchaser, that each of its products will be free from defects in materials and workmanship for two years from the date of purchase.

This warranty does not apply to any products which have been repaired or altered by persons other than repair personnel authorized by Advantech, or which have been subject to misuse, abuse, accident or improper installation. Advantech assumes no liability under the terms of this warranty as a consequence of such events.

Because of Advantech's high quality-control standards and rigorous testing, most of our customers never need to use our repair service. If an Advantech product is defective, it will be repaired or replaced at no charge during the warranty period. For out-of-warranty repairs, you will be billed according to the cost of replacement materials, service time and freight. Please consult your dealer for more details.

If you think you have a defective product, follow these steps:

1. Collect all the information about the problem encountered, for example, Advantech products used, other hardware and software used, etc. Note anything abnormal and list any onscreen messages you get when the problem occurs.
2. Call your dealer and describe the problem. Please have your manual, product, and any helpful information readily available.
3. If your product is diagnosed as defective, obtain an RMA (return merchandise authorization) number from your dealer. This allows us to process your return more quickly.
4. Carefully pack the defective product, a fully-completed Repair and Replacement Order Card and a photocopy proof of purchase date (such as your sales receipt) in a shippable container. A product returned without proof of the purchase date is not eligible for warranty service.
5. Write the RMA number visibly on the outside of the package and ship it prepaid to your dealer.

Appendix F

Glossary

ACPI	Advanced Configuration and Power Interface
AHCI	Advanced Host Controller Interface
APIC	Advanced Programmable Interrupt Controller
BIOS	Basic Input Output System
BMC	Baseboard Management Controller
CPU	Central Processing Unit
EHCI	Enhanced Host Controller Interface
FRU	Field Replaceable Unit
FW	Firmware
GbE	Gigabit Ethernet
HPM	Hardware Platform Management
HWM	Hardware Monitor (chip)
IPMC	Intelligent Platform Management Controller
IPMI	Intelligent Platform Management Interface
LOM	Lights Out Management
MAC	Media Access Control
MTBF	Mean Time Between Failures
NIC	Network Interface Controller
NMC	Network Mezzanine Card
NVRAM	Non-volatile Random Access Memory
OOS	Out Of Service
PCH	Platform Controllers Hub
PCIe	PCI Express
PECI	Platform Environment Control Interface
PCI SIG	PCI Special Interest Group
PICMG	PCI Industrial Computer Manufacturers Group
POST	Power On Self Test
PSU	Power Supply Unit
PXE	Pre-boot Execution Environment
QAT	QuickAssist Technology
QPI	QuickPath Interconnect
RASUM	Reliability, Availability, Serviceability, Usability, Maintainability
RDIMM	Registered DIMM
RMCP	Remote Management Control Protocol
RX	Receive
SAS	Serial Attached SCSI

■

SATA	Serial Advanced Technology Attachment
SCSI	Small Computer System Interface
SDR	Sensor Data Record
SerDes	Serializer/Deserializer
SOL	Serial Over LAN
SSD	Solid State Disk
SW	Software
TPM	Trusted Platform Module
TX	Transmit
UDIMM	Unbuffered DIMM
UHCI	Universal Host Controller Interface
USB	Universal Serial Bus

www.advantech.com

Please verify specifications before quoting. This guide is intended for reference purposes only.

All product specifications are subject to change without notice.