Version:1.0

Advantech AE Technical Share Document

Date	2021/12/22	**Release Note**	□Internal■ External
Category	■ FAQ □ SOP	**Related OS**	N/A
Abstract	How to monitor HSP/PRP port status		
Keyword	HSR, PRP, ECU-P1524PE, ECU-4784		
Related Product	ECU-4784, ECU-P1524PE		

■ Problem Description:

Windows internet settings could not monitor the exact link status of the two HSR/PRP ports

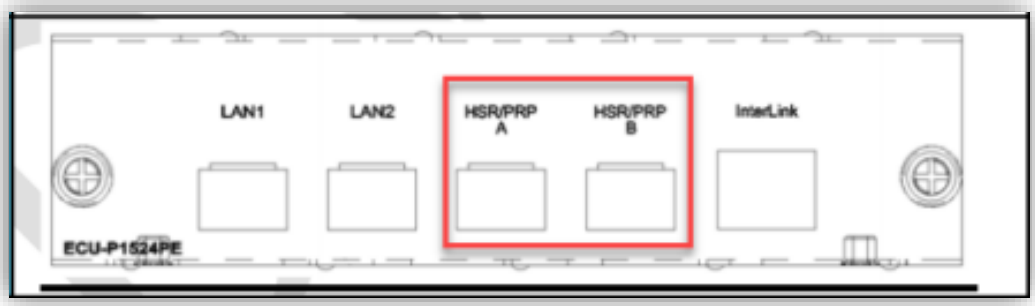

[Screenshot with two HSR/PRP ports connected]

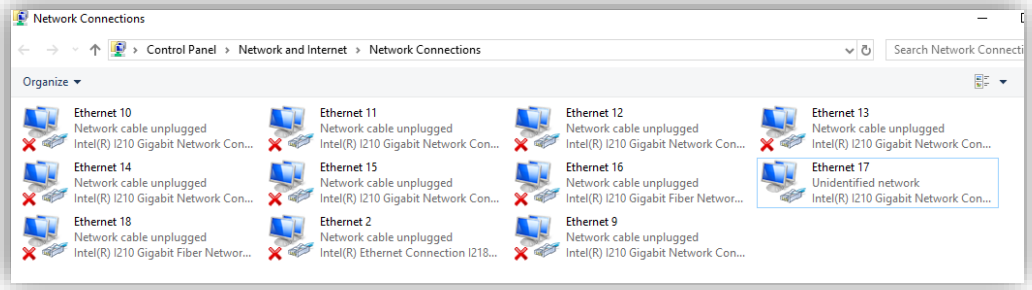

■ Problem Analysis:

These LAN ports are sharing the same i210 chip through Redbox, only i210 link status could be seen from OS. IP address cannot be set separately on each HSR/PRP port, and not able to ping the LAN directly.

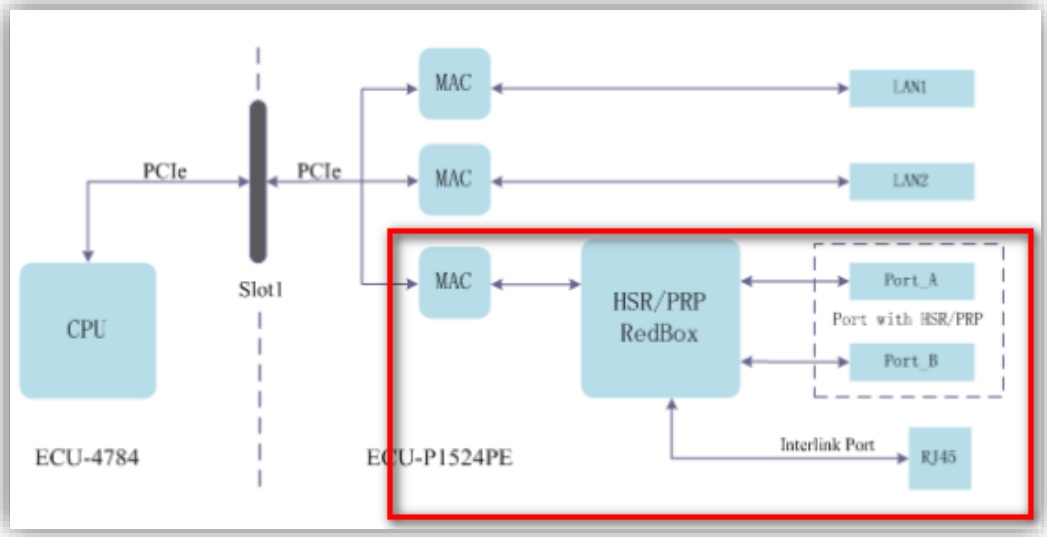

- **Brief Solution - Step by Step**:

  Advantech has built 'FRS monitors and controls tool' for reading HSR/PRP ports link status from Redbox.

1. Download the FRS_PTP tool from the website

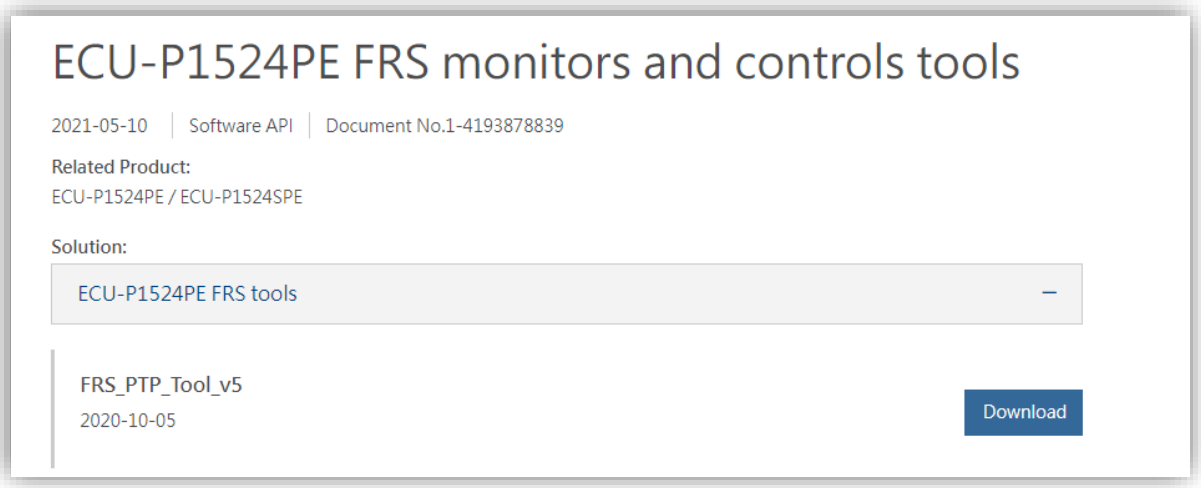

2. Insert the SFP fiber cable.
   - If you are using SFP transceiver, please choose **LC connector**, so that the tool could read the correct status.
     With RJ45 transceiver, the tool cannot read the correct status. When the transceiver is inserted, with or without copper cables, Redbox will see it as connected (Because of the transceiver's structure, the detect pin would always be connected.).

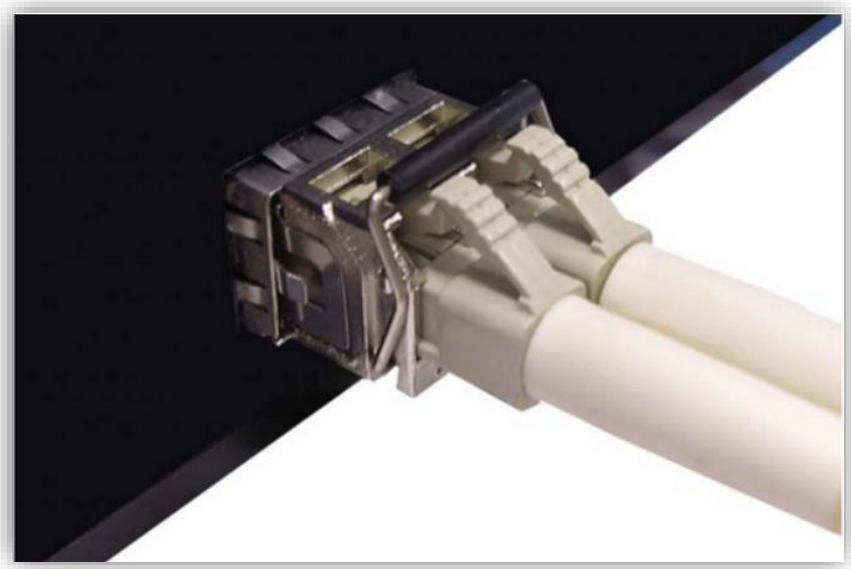

3. After inserting the cable, you may double click FRS_PTP_TOOL icon to execute the tool, and the port status will be shown as the following, with link speed as well.